Oppermann® Regelgeräte

OPP-SENS® Accessories

Illuminated display, indicator & control panel with autoadapt and capacitive keys.

Fits all round **OPP-SENS®**-sensors with connection heads with active outputs. The unit is fitted with ribbon cable and a reverse polarity connector on the electronics board and is ready for operation without adjustment (autoadapt).The corresponding menu for the transmitter is automatically displayed.

The unit is illuminated (only with 3-wire connection) and has capacitive buttons.

The duration of lighting, contrast and temperature units can be adjusted via the menu.

With the bus transmitters, all parameters such as bus addresses, baud rate, etc. can be set directly. Also, the 5-point calibration is performed via this unit. IP 65 protection due to the integrated seal.

For configuration and calibration:
Multiple sensors can be configured one after another using one unit and then operated with the normal cover closed.

Operation as actual value display:
The display permanently replaces the cover.

Autoteach-function of the button
The capacitive key recognize the pressure on the capacitance change, which is measured at the touch of the finger. As a visual feedback of a recognized key press the display area above the button is highlighted in black.

Since this capacitance measurement depends on variable external factors, the autoteach-function ensures the automatic adaptation to changed circumstances.

When you turn on the transmitter, the button must not be touched, because at this point the basic capacity of unpressed button is determined.

When you press the button, the currently measured capacity is used to adjust the calibration of the probe. This adjustment does not take place abruptly but over averaging.

A Hypersensitive button can be regulated, for example, by keeping them pressed for about 15 seconds. This works even when multiple keys are pressed simultaneously.

Basically, it should be noted that the rear or the board of the display during operation must not be touched.

Drawing

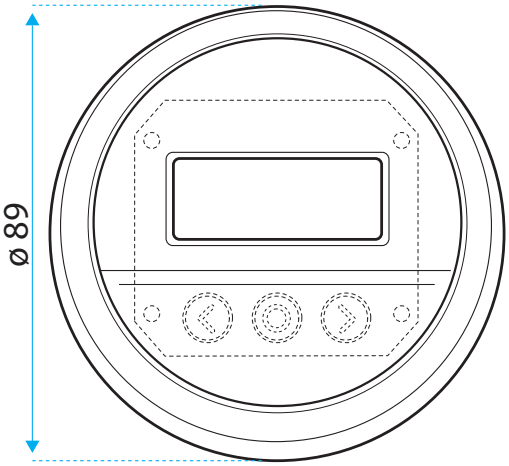

Sizes in mm

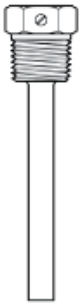

Immersion sleeves

for use with standard temperature sensors and transmitters such as cable temperature sensors with ø 6 mm.

Connection: G½ A
Type: Type ATM, PN 16 bar, nickel-plated brass
Type AT, PN 40 bar, stainless steel 1.4571
Immersion depth: See table

Immersion sleeve type	Immersion depth mm							
	50	100	150	200	250	300	350	450
Type ATM, nickel-plated brass Item no.	100 038	100 040	100 041	100 042	100 043	100 044	100 045	100 046
Type AT, stainless steel 1.4571 Item no.	100 024	100 027	100 029	100 031	100 033	100 035	100 036	100 037

Ordering example: Immersion sleeve with depth 100 mm,
Stainless steel PN 40: AT 100
Nickel-plated brass: ATM 100

The capacity of the immersion sleeves (protective tubes) depends on the process medium, pressure, temperature, flow rate as well as the design of the protective tube and the installation situation. In critical operating conditions a separate calculation is recommended. The professional planner/implementing company is responsible for the selection of the immersion sleeve appropriate for the application.
Current local rules and regulations are to be observed, in particular:

- VDE/VDI 3511 Technical temperature measurements
- DIN 43772 Control technology – metal protective tubes and extension tubes for liquid-in-glass thermometers, dial thermometers, thermocouples and resistance thermometers – dimensions, materials, testing
- VDI Guideline 2035, page 2 – water related corrosion; preventing damage in hot water heating systems Stainless steel tubes are to be selected for cooling devices, well water and contact with food..

Air duct flange

for use with **OPP-SENS®** sensors.
For straight and round ducts with lip seal for airtight seal, 2 holes for bolting to air duct.
The flanges are made of dark grey plastic, including cross-head screw for fixing the sensor.

Bore diameter:
F-13: ø 13 mm for attaching the base temperature sensor on the housing, **standard**

F-6: ø 6 mm moveable along the length of the probe

F-10 : ø 10 mm for airflow and moisture sensors moveable along the length of the probe

Weather protection

Stainless steel
For devices and sensors of the series
OPP-SENS®, DD..., and HT-TGÜ

Drawing

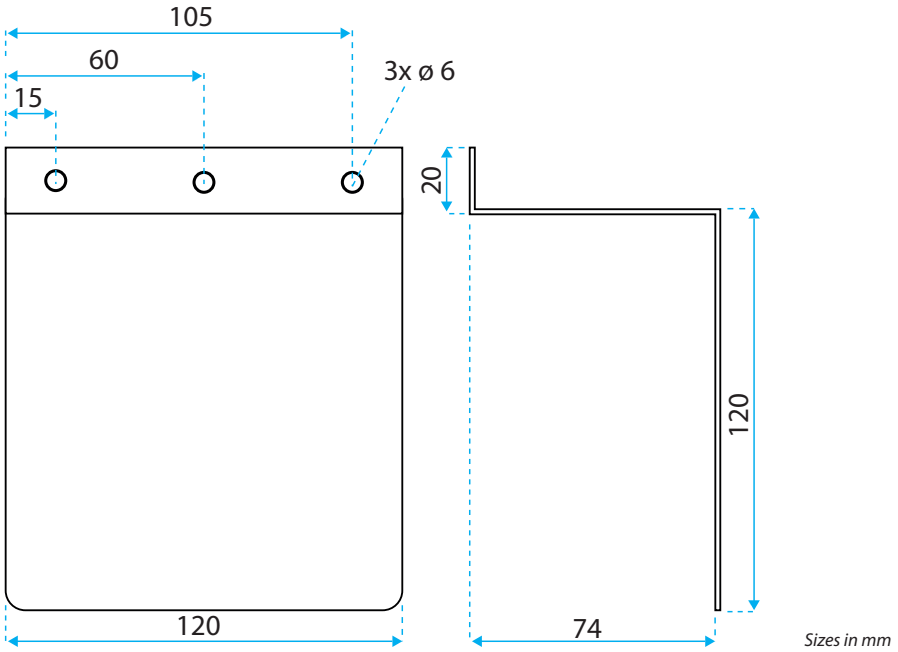

Oppermann Regelgeräte GmbH | Im Spitzhau 1 | 70771 Leinfelden-Echterdingen, Germany
Phone +49 711 72723560 | Fax +49 711 7280527 | info@oprg.de | www.oprg.de