STEPPER CNC KIT
REFERENCE MANUAL

Overview

This documentation describes the wiring of the various motors and drivers in our CNC kits. Please use this reference document as an aid to the additional manuals and datasheets associated with the relevant motors and drivers.

General Notes on Breakout Board

- CNC Kits from Ocean Controls come with a 4-axis Parallel Port Breakout Board (**KTx-205**). The interface is designed for buffering the signals in and out of the PC to provide Stepper Motor control signals among several additional features.
- The card takes external power, typically 12 or 24 VDC. The only difference between the 12 and 24 VDC versions are the relays loaded on the board. If the relays are never used, the board can be powered from 8 to 30 VDC.
- The main circuitry consists of two buffer ICs that boost the weak parallel port signals to a level high enough to drive Stepper Motor Driver Circuits using Opto-Couplers.
- The Breakout Board provides 9 buffered output signals to control up to 4 Stepper Motor Drivers, 5 digital inputs designed for use as limit switch or e-stop inputs, 2 Relay Outputs to control spindles, coolant or vacuums, and a spare output connected directly to the port (useable only in the version without charge pump).
- With the safety charge pump option the board also includes a microcontroller that monitors the CNC software and turns off the relays and output signals when the charge pump signal from the CNC software is lost. **PLEASE NOTE: The board will not do anything unless the charge pump signal is present on Pin 1 of the Parallel port.**

Features:

- 4 Axis CNC Breakout Board
- Step, Direction and Limit Switch Connections for Each Axis
- 2 Relays with indicator LED's for Spindle, Coolant or Vacuum Control
- 3 Extra IO for further Expansion
- 12V or 24V DC Power Option
- Charge Pump Safety Option

Finished Dimensions (mm): 85Wx88Lx25H

Available as:

- KT**A**-205 (12V Powered without Charge-Pump Circuit)
- KT**B**-205 (24V Powered without Charge-Pump Circuit)
- KT**C**-205 (12V Powered with Charge-Pump Circuit)
- KT**D**-205 (24V Powered with Charge-Pump Circuit)

General Notes on Stepper Motors and Drivers

- Stepper motors consist of inductive coils and when powered, produce significant current flow through the coils. Disconnecting or connecting an inductor with current flowing can generate high voltages as a result. This can cause damage to the stepper motor driver. It's important to ensure that drivers are powered down before connecting or disconnecting motors. It's also important to ensure the motor wiring is securely connected at the driver and any interconnections so that the wires can't come loose with vibration and cause damage.
- Swapping the polarity of one of its coils will reverse the direction that a stepper motor rotates. If a motor spins in the opposite of your desired direction, disconnect the power to the driver and swap the motor wires in the **A+** terminal with the motor wires in the **A–** terminal.
- Each stepper motor driver has a power supply voltage range. Higher voltages enable higher top speeds from your stepper motor but the maximum voltage applied to the driver needs to be a little lower than the driver's maximum. When a stepper motor is decelerating it acts as a generator. This voltage adds to the voltage from the power supply and can exceed the maximum rating of the driver.
- In general, the driver current (in amps RMS) should be set to correct current handling of the stepper motor. In the instance where drivers have serial interfaces (fully digital and anti-resonance drivers), the Windows software can be then used to set the current more precisely than the driver's physical switches.
- Driver current can be reduced to reduce motor heating. Stepper motors can run hot; 50 to 80 ºC is not unusual, though this might be unacceptable if the motors are exposed where people can touch them.
- Most drivers have a setting that allows the ability to reduce the motor current when the motor is at rest. This is usually enabled by setting switch 4 to off (Please check relevant driver's manual). This configuration is generally recommended.
- Anti-resonance drivers have current loop tuning and position loop tuning. The current loop can be automatically tuned by toggling the fourth switch on and off (Please check relevant driver's manual). You'll hear the motor make a brief rising bussing noise as the driver tunes the current loop.
- Tuning the position loop for an anti-resonance driver requires that the motor be mounted in the machine, as the physical resonances will be affected by the machine stiffness and load. The driver manuals outline how to tune the position loop but the process is a bit of an art. Without tuning, the driver will be at least as good as a pure sinusoidal driver.
- All of our drivers are microstepping drivers. These drivers allow for higher precision and smoother movement than a stepper motor's natural 1.8º step size. Higher microstep resolutions will result in more precise and smoother movement, but require higher frequency from your controller (i.e. PC running Mach3) to spin the motors. There is an upper limit to the frequency you can get out of a PC's parallel port (which depends on your PC, operating system and software). We recommend starting at a microstep resolution of 1600 steps per revolution. This can be adjusted up for finer movement or down to achieve higher speeds.
- This reference manual covers components that make up our CNC kits. They do not cover a complete range of motors available from Ocean Controls. Please visit http://oceancontrols.com.au/motors.html for a complete range motors and accessories.

STEPPER MOTORS

MOT-116: FL39STH38-0806B

The **MOT-116** is a dual shaft **NEMA17** motor. Has a holding torque of **2.0 Kg·cm (0.196 N·m or 28 oz·in)**. The output shaft is **⌀ 5 mm round**. The motor draws **0.8 A** per phase. *Please note that for a 6-wire stepper motor connection, the 2 centre-taps are left unconnected. We recommend taping or sealing off the wire to prevent any unwanted shorts.*

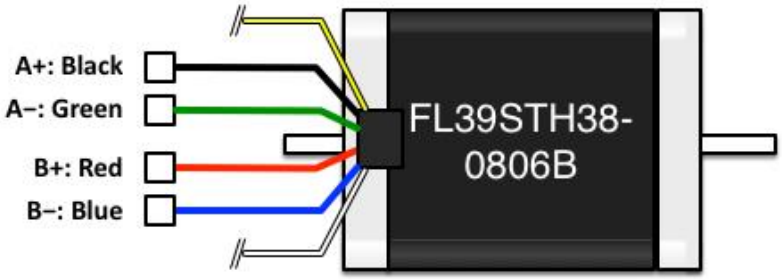

RECOMMENDED DRIVERS

The recommended driver for these motors is the **SMC-010 (DM422C)**. This driver is typically powered by a **24 VDC** supply.

SWITCH SETTINGS

SMC-010 (DM422C) SWITCH SETTINGS

SW1	SW2	SW3	SW4	SW5	SW6	SW7	SW8
OFF	OFF	ON	ON	OFF	ON	-	-

0.71A, 1600 steps/rev

MOT-121: FL42STH47-1684B

The **MOT-121** is a dual shaft **NEMA17** motor. Has a holding torque of **4.4 kg·cm (0.431 N·m or 61 oz·in)**. The output shaft is **⌀5 mm round**. The motor draws **1.68 A** per phase.

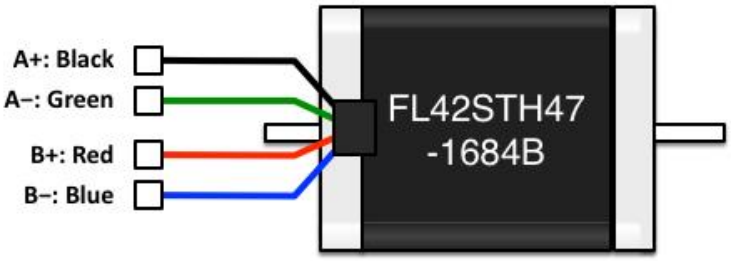

RECOMMENDED DRIVERS

Model	Typical Voltage	Features
SMC-003: M542	36 VDC	Current Chopping Driver
SMC-040: MX3660	48 VDC	Three Axis Driver

SWITCH SETTINGS

SMC-003 (M542) SWITCH SETTINGS

SW1	SW2	SW3	SW4	SW5	SW6	SW7	SW8
OFF	OFF	ON	OFF	OFF	OFF	ON	ON

1.69A, 1600 steps/rev

SMC-040 (MX3660)
SWITCH SETTINGS

SW1	SW2	SW3	SW4	SW5	SW6
OFF	ON	ON	OFF	OFF	ON

1.48A, 1600 steps/rev

MOT-123: FL57STH51-2804A

The **MOT-123** is a single shaft, 4-wire, **NEMA23** motor. Has a holding torque of **10.1 Kg.cm (0.99 N.m or 140 oz.in)**. The output shaft is **⌀6.35 mm round**. This motor draws **2.8 A** per phase.

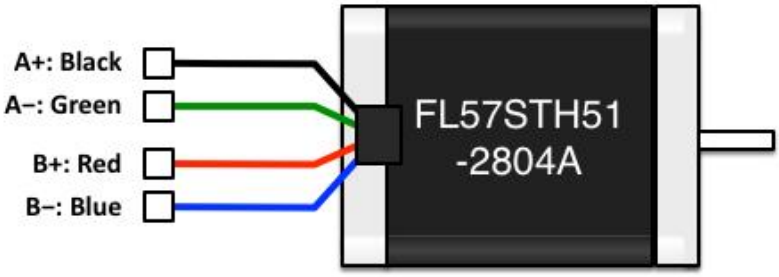

RECOMMENDED DRIVERS

Model	Typical Voltage	Features
SMC-003: M542	36 VDC	Basic Microstepping Driver
SMC-012: DM442	36 VDC	Anti-resonance Tuning
SMC-031: EM503	36 VDC	Anti-resonance Tuning, Sensorless Stall Detection
SMC-040: MX3660	48 VDC	Three Axis Driver

SWITCH SETTINGS

SMC-003 (M542)
SWITCH SETTINGS

SW1	SW2	SW3	SW4	SW5	SW6	SW7	SW8
ON	OFF	OFF	OFF	OFF	OFF	ON	ON

2.69A, 1600 steps/rev

SMC-012 (DM442)
SWITCH SETTINGS

SW1	SW2	SW3	SW4	SW5	SW6	SW7	SW8
ON	OFF	OFF	OFF	OFF	OFF	ON	ON

2.69A, 1600 steps/rev

SMC-031 (EM503)
SWITCH SETTINGS

SW1	SW2	SW3	SW4	SW5	SW6	SW7	SW8
ON	OFF	OFF	ON	OFF	OFF	ON	ON

2.69A, 1600 steps/rev

SMC-040 (MX3660)
SWITCH SETTINGS

SW1	SW2	SW3	SW4	SW5	SW6
OFF	OFF	ON	OFF	OFF	ON

2.41A, 1600 steps/rev

MOT-125: FL57STH76-2804B

The **MOT-125** is a dual shaft **NEMA23** motor. Has a holding torque of **18.9 Kg.cm (1.85 N.m or 262 oz.in)**. The output shaft is **⌀6.35 mm round**. This motor draws **2.8 A** per phase.

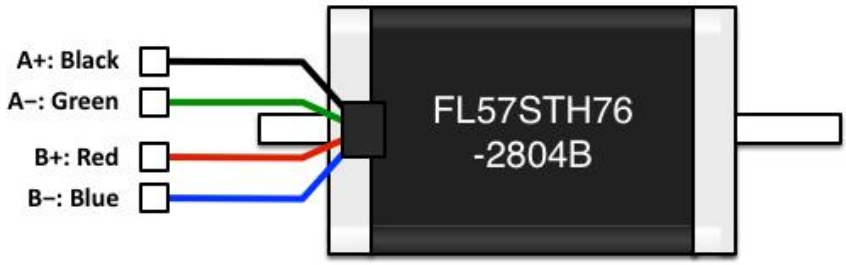

RECOMMENDED DRIVERS

Model	Typical Voltage	Features
SMC-003: M542	36 VDC	Basic Microstepping Driver
SMC-012: DM442	36 VDC	Anti-resonance Tuning
SMC-031: EM503	36 VDC	Anti-resonance Tuning, Sensorless Stall Detection
SMC-040: MX3660	48 VDC	Three Axis Driver

SWITCH SETTINGS

SMC-003 (M542) SWITCH SETTINGS

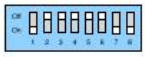

SW1	SW2	SW3	SW4	SW5	SW6	SW7	SW8
ON	OFF	OFF	OFF	OFF	OFF	ON	ON

2.69A, 1600 steps/rev

SMC-012 (DM442) SWITCH SETTINGS

SW1	SW2	SW3	SW4	SW5	SW6	SW7	SW8
ON	OFF	OFF	OFF	OFF	OFF	ON	ON

2.69A, 1600 steps/rev

SMC-031 (EM503) SWITCH SETTINGS

SW1	SW2	SW3	SW4	SW5	SW6	SW7	SW8
ON	OFF	OFF	ON	OFF	OFF	ON	ON

2.69A, 1600 steps/rev

SMC-040 (MX3660) SWITCH SETTINGS

SW1	SW2	SW3	SW4	SW5	SW6
OFF	OFF	ON	OFF	OFF	ON

2.41A, 1600 steps/rev

MOT-128: FL60STH86-2008BF

The **MOT-128** is our most popular motor. It's an 8-wire motor, which means it can be wired in a few ways. We generally recommend wiring the motor coils in **parallel**, as this tends to give more torque at higher speed (at the expense of a little torque at low speed). In this configuration, the motor has a rated coil current of **2.8 A**. Has a holding torque of **31 kg.cm (3.04 Nm or 430 oz-in)**. The output shaft is **⌀6.35 mm with a flat**.

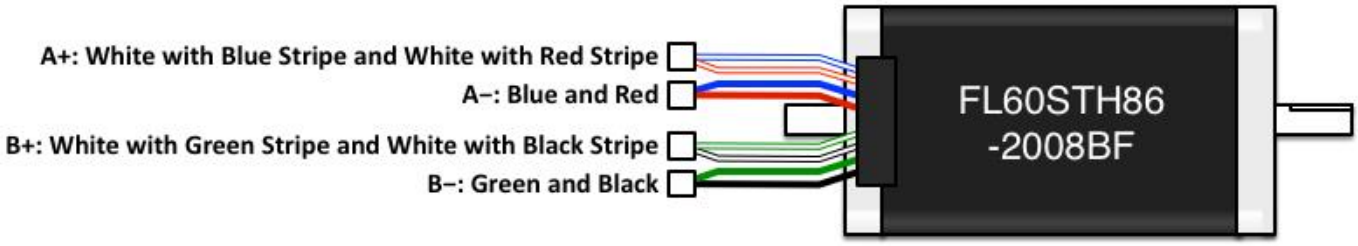

RECOMMENDED DRIVERS

Model	Typical Voltage	Features
SMC-003: M542	36 VDC	Basic Microstepping Driver
SMC-012: DM442	36 VDC	Anti-resonance Tuning
SMC-031: EM503	36 VDC	Anti-resonance Tuning, Sensorless Stall Detection
SMC-040: MX3660	48 VDC	Three Axis Driver

SWITCH SETTINGS

SMC-003 (M542) SWITCH SETTINGS

SW1	SW2	SW3	SW4	SW5	SW6	SW7	SW8
ON	OFF	OFF	OFF	OFF	OFF	ON	ON

2.69A, 1600 steps/rev

SMC-012 (DM442) SWITCH SETTINGS

SW1	SW2	SW3	SW4	SW5	SW6	SW7	SW8
ON	OFF	OFF	OFF	OFF	OFF	ON	ON

2.69A, 1600 steps/rev

SMC-031 (EM503) SWITCH SETTINGS

SW1	SW2	SW3	SW4	SW5	SW6	SW7	SW8
ON	OFF	OFF	ON	OFF	OFF	ON	ON

2.69A, 1600 steps/rev

SMC-040 (MX3660) SWITCH SETTINGS

SW1	SW2	SW3	SW4	SW5	SW6
OFF	OFF	ON	OFF	OFF	ON

2.41A, 1600 steps/rev

MOT-130: FL86STH80-5504B

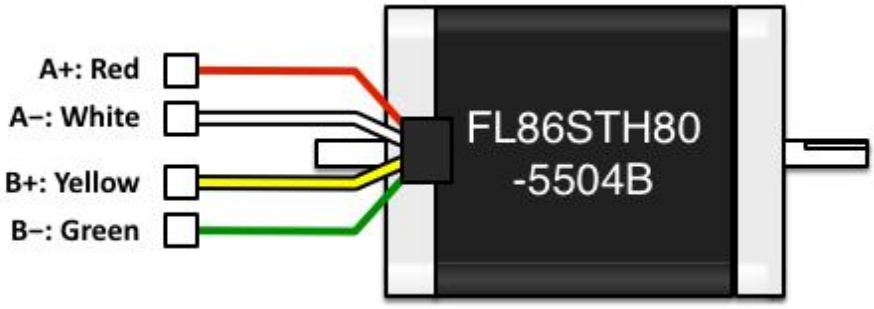

The **MOT-130** and **MOT-131** are the same motor with different shaft configurations. The **MOT-130** has front and rear shafts. The **MOT-131** is single shaft. The front shaft on both motors is **⌀12.7 mm with a flat**. Both have a holding torque of **46 kg.cm (4.51 Nm or 638 oz-in)**. Both motors draw **5.5 A** per phase.
See the **MOT-131** section for recommended drivers and switch settings.

MOT-131: FL86STH80-5504A

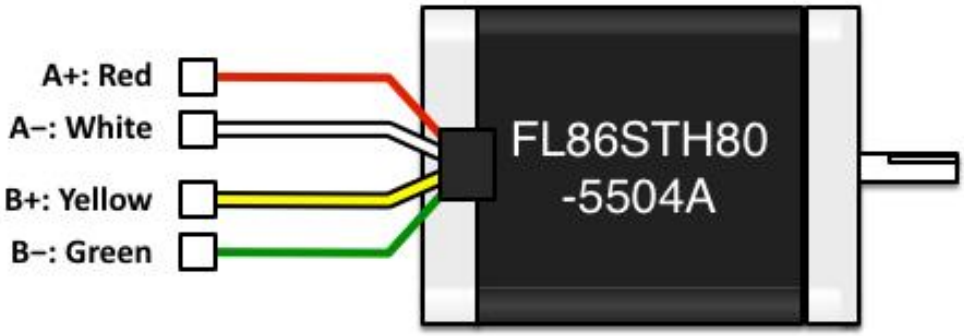

RECOMMENDED DRIVERS

The recommended driver for these motors is the **SMC-033 (EM806)**. This driver is typically powered by a **48 VDC** supply.

SWITCH SETTINGS

SMC-033 (EM806)
SWITCH SETTINGS

SW1	SW2	SW3	SW4	SW5	SW6	SW7	SW8
ON	OFF	OFF	ON	OFF	OFF	ON	ON

5.21 A, 1600 steps/rev

MOT-132: FL86STH118-6004B

The **MOT-132** is a 4-wire, NEMA32 dual-shaft stepper motor. Has a holding torque of **87 kg.cm (8.5 Nm or 1208 oz-in)**. The **MOT-132** has a front shaft size of **⌀12.7 mm in diameter with a keyway** and the rear shaft is **⌀12.7 mm in diameter round**. The **MOT-132** draws **6 A** per phase.

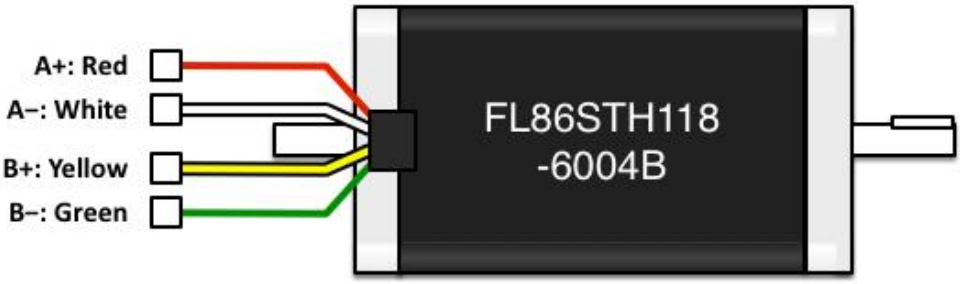

RECOMMENDED DRIVERS

The recommended driver for these motors is the **SMC-033 (EM806)**. This driver is typically powered by a **48 VDC** supply.

SWITCH SETTINGS

SMC-033 (EM806)
SWITCH SETTINGS

SW1	SW2	SW3	SW4	SW5	SW6	SW7	SW8
OFF	OFF	OFF	ON	OFF	OFF	ON	ON

5.86 A, 1600 steps/rev

MOT-135: FL86STH156-6204B

The **MOT-135** is a 4-wire, **NEMA32** dual-shaft stepper motor. Has a holding torque of **122 kg.cm (11.96 Nm or 1694 oz-in)**. The **MOT-135** has a front shaft size of **⌀15.875 mm in diameter with a keyway** and the rear shaft is **⌀12 mm in diameter round**. The **MOT-135** draws **6.2 A** per phase.

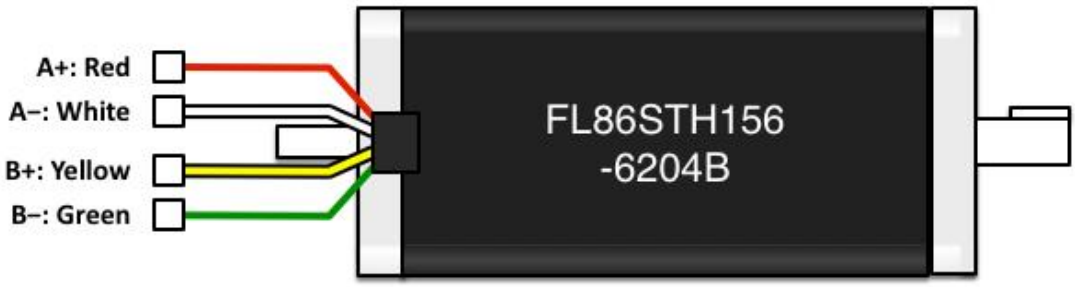

RECOMMENDED DRIVERS

The recommended driver for these motors is the **SMC-033 (EM806)**. This driver is typically powered by a **48 VDC** supply.

SWITCH SETTINGS

SMC-033 (EM806)
SWITCH SETTINGS

SW1	SW2	SW3	SW4	SW5	SW6	SW7	SW8
OFF	OFF	OFF	ON	OFF	OFF	ON	ON

5.86 A, 1600 steps/rev

STEPPER MOTOR WIRING DIAGRAMS

DIAGRAM OUTLINE

Diagram 1: Wiring for kits consisting of Differential Input Stepper Drives and a Single Power Supply powering all 3 motors and drives. Applies to kits **CNC-0421.**

Diagram 2: Wiring for kits consisting of Differential Input Stepper Drives and using a Dual Power Supply Configuration. Applies to kits **CNC-0441, CNC-0442, CNC-0443, CNC-0461, CNC-0462, CNC-0463, CNC-0481, CNC-0482, CNC-0483** and **CNC-050.**

Diagram 3: Wiring for kits consisting of Differential Input Stepper Drives and using an independent power supply per axis. Applies to kits **CNC-052,** and **CNC-054.**

Diagram 4: Wiring for kits consisting of Single-ended Input Stepper Drives and a Single Power Supply powering all 3 motors and drives. Applies to kits **CNC-040**.

Diagram 5: Wiring for kits that utilise the SMC-040 (MX3660) 3 Axis driver. Applies to kits **CNC-0422, CNC-0444, CNC-0464,** and **CNC-0484.**

Diagram 6: Covers VFD, limit switch and E-Stop wiring connections for SMC-040 (MX3660) related kits. Applies to kits **CNC-0422, CNC-0444, CNC-0464,** and **CNC-0484.**

Diagram 7: Covers example output wiring for relay control for kits using the SMC-040 (MX3660). Applies to kits **CNC-0422, CNC-0444, CNC-0464,** and **CNC-0484.**

Diagram 8: Wiring for additional 4th axis using an independent power supply.

Diagram 9: Wiring for additional 4th axis using an existing power supply. Please ensure that existing power supply is sufficiently capable of driving the 4th axis stepper drive and stepper motor. Damage could result from improper set-up.

Diagram 10: Covers typical limit switch wiring for our KTx-205 CNC controller.

Diagram 11: Wiring to adapt 2 stepper motors to a single axis. Recommended for axes greater than 1.5m.

1. DIFFERENTIAL INPUT STEPPER DRIVES (SINGLE SUPPLY CONFIGURATION)

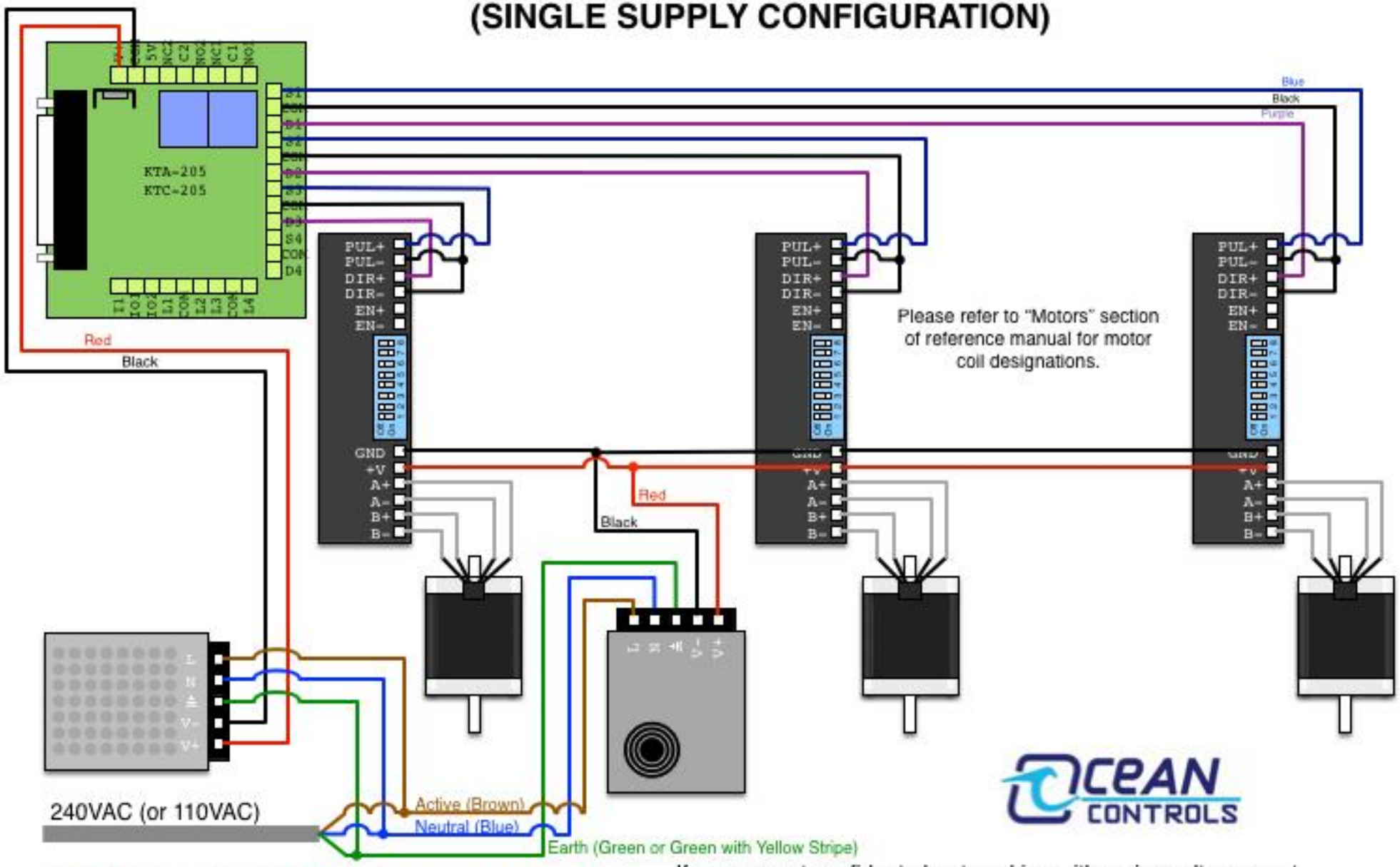

WARNING: LINE VOLTAGES ARE DANGEROUS

If you are not confident about working with mains voltages, get a licensed electrician to check your work before connecting power.

2. DIFFERENTIAL INPUT STEPPER DRIVES (DUAL SUPPLY CONFIGURATION)

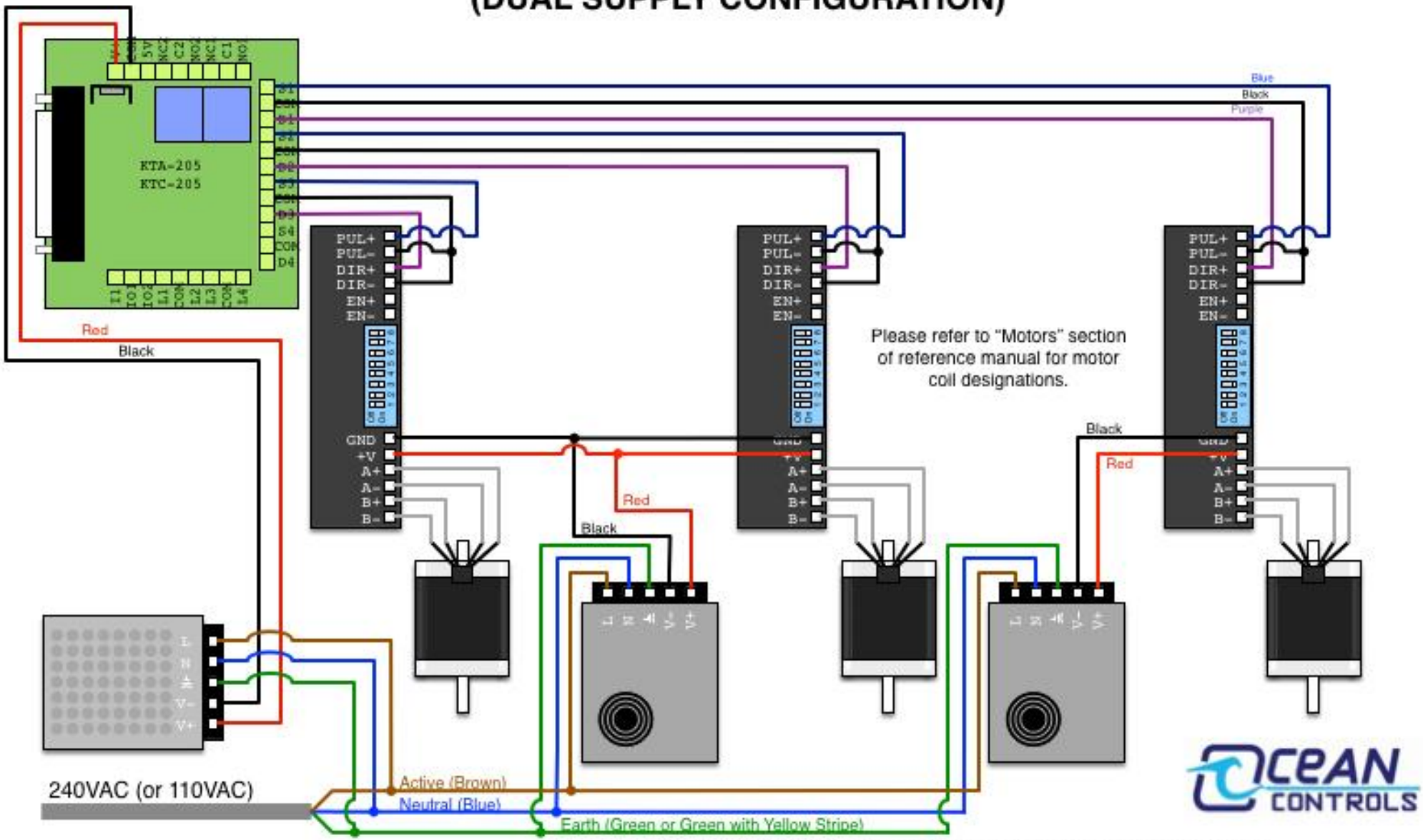

WARNING: LINE VOLTAGES ARE DANGEROUS

If you are not confident about working with mains voltages, get a licensed electrician to check your work before connecting power.

3. DIFFERENTIAL INPUT STEPPER DRIVER (INDEPENDENT SUPPLY CONFIGURATION)

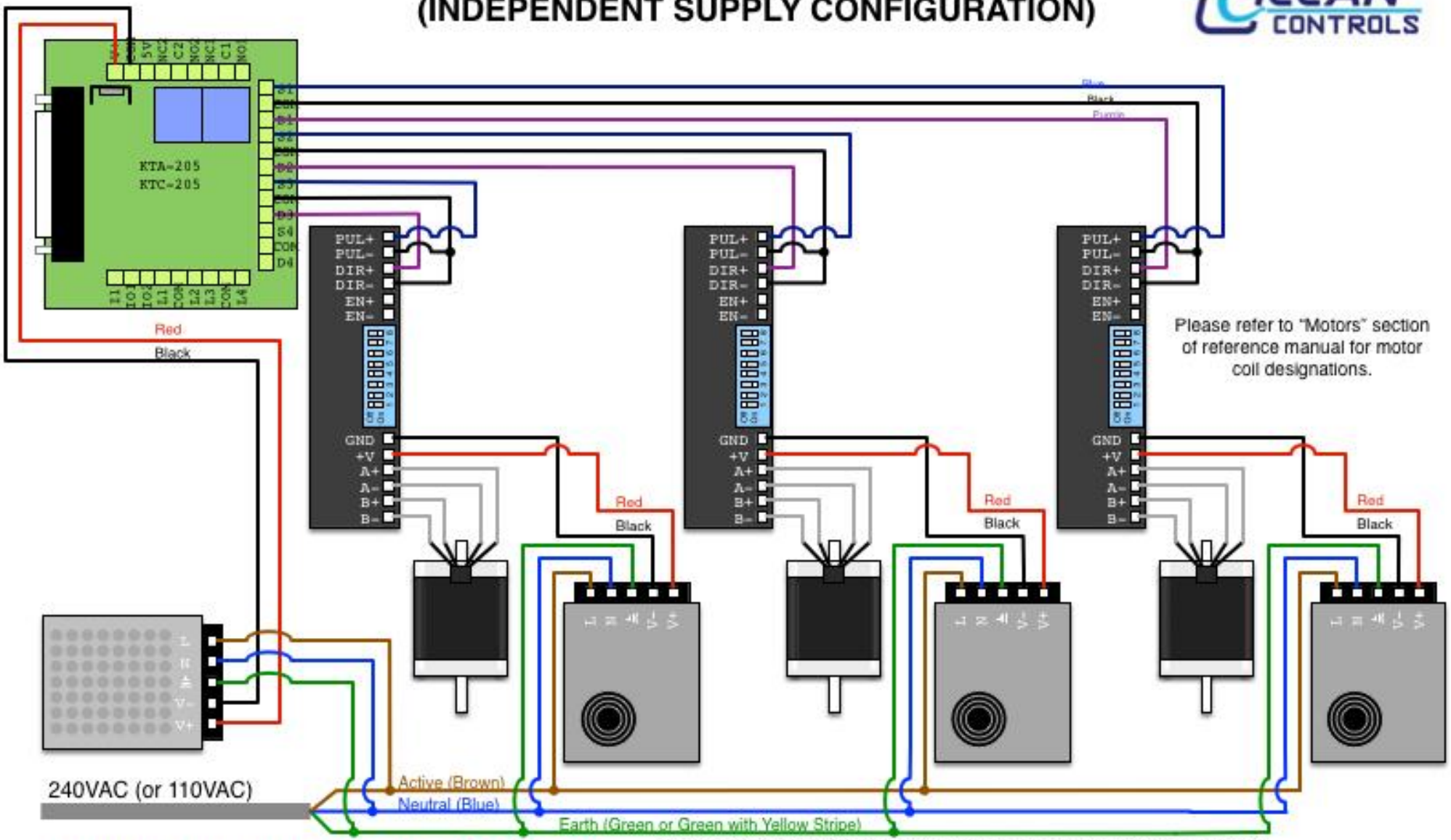

WARNING: LINE VOLTAGES ARE DANGEROUS

If you are not confident about working with mains voltages, get a licensed electrician to check your work before connecting power.

4. SINGLE-ENDED INPUT STEPPER DRIVES

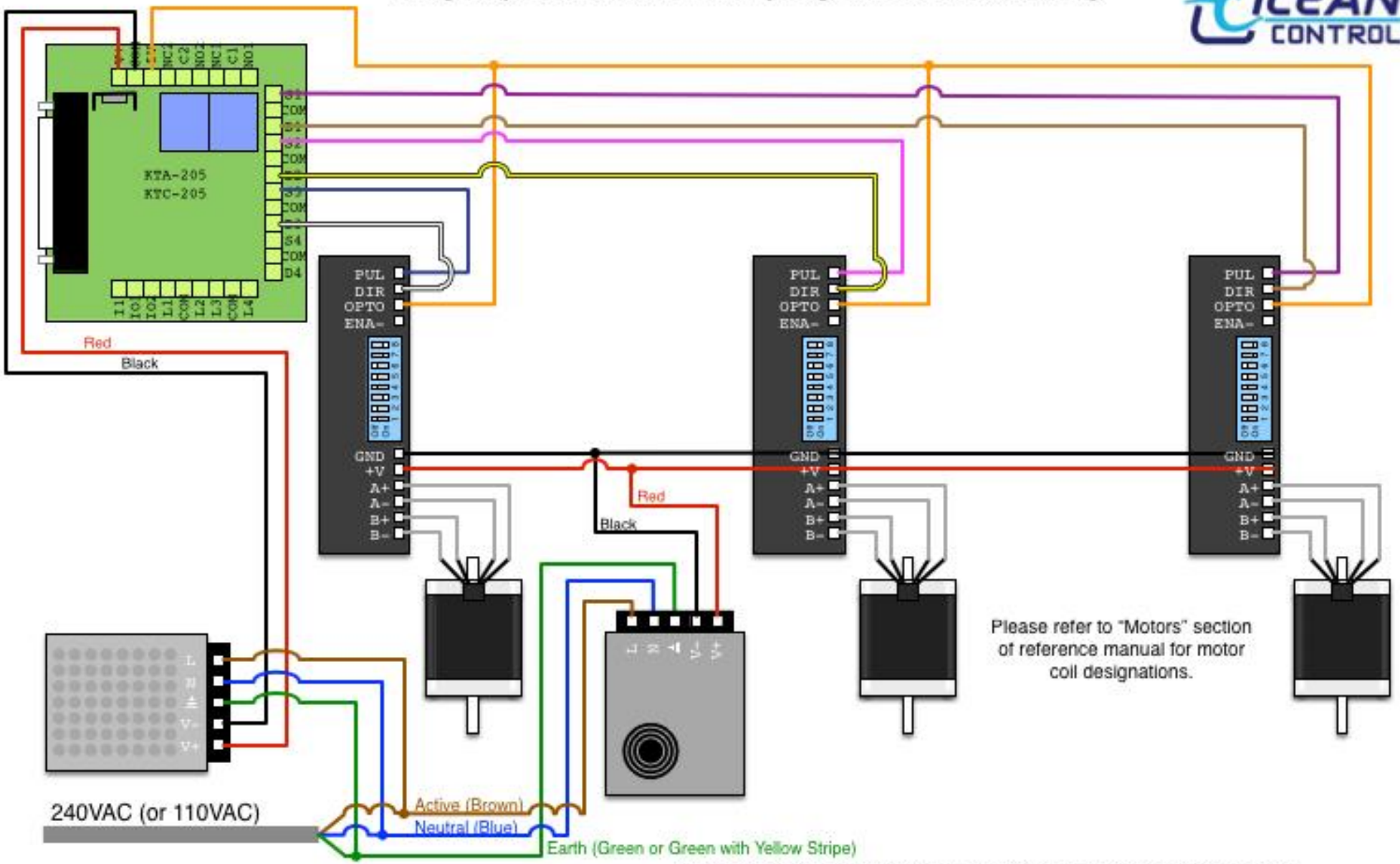

WARNING: LINE VOLTAGES ARE DANGEROUS

If you are not confident about working with mains voltages, get a licensed electrician to check your work before connecting power.

5. (SMC-040) MX3660 3-AXIS STEPPER DRIVER CONNECTION DIAGRAM

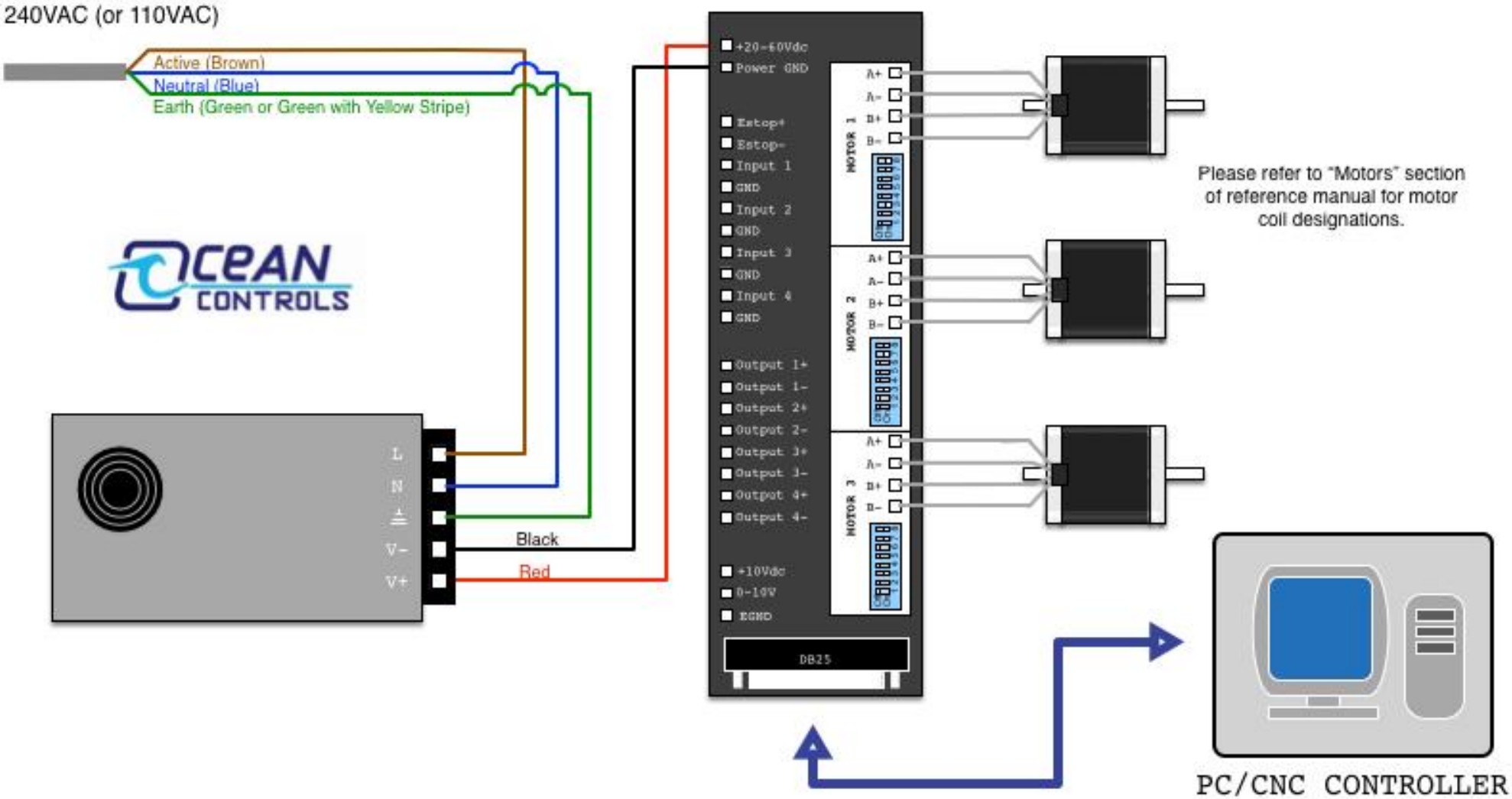

WARNING: LINE VOLTAGES ARE DANGEROUS

If you are not confident about working with mains voltages, get a licensed electrician to check your work before connecting power.

6. (SMC-040) MX3660 3-AXIS STEPPER DRIVER (EXTERNAL OPTIONS 1)

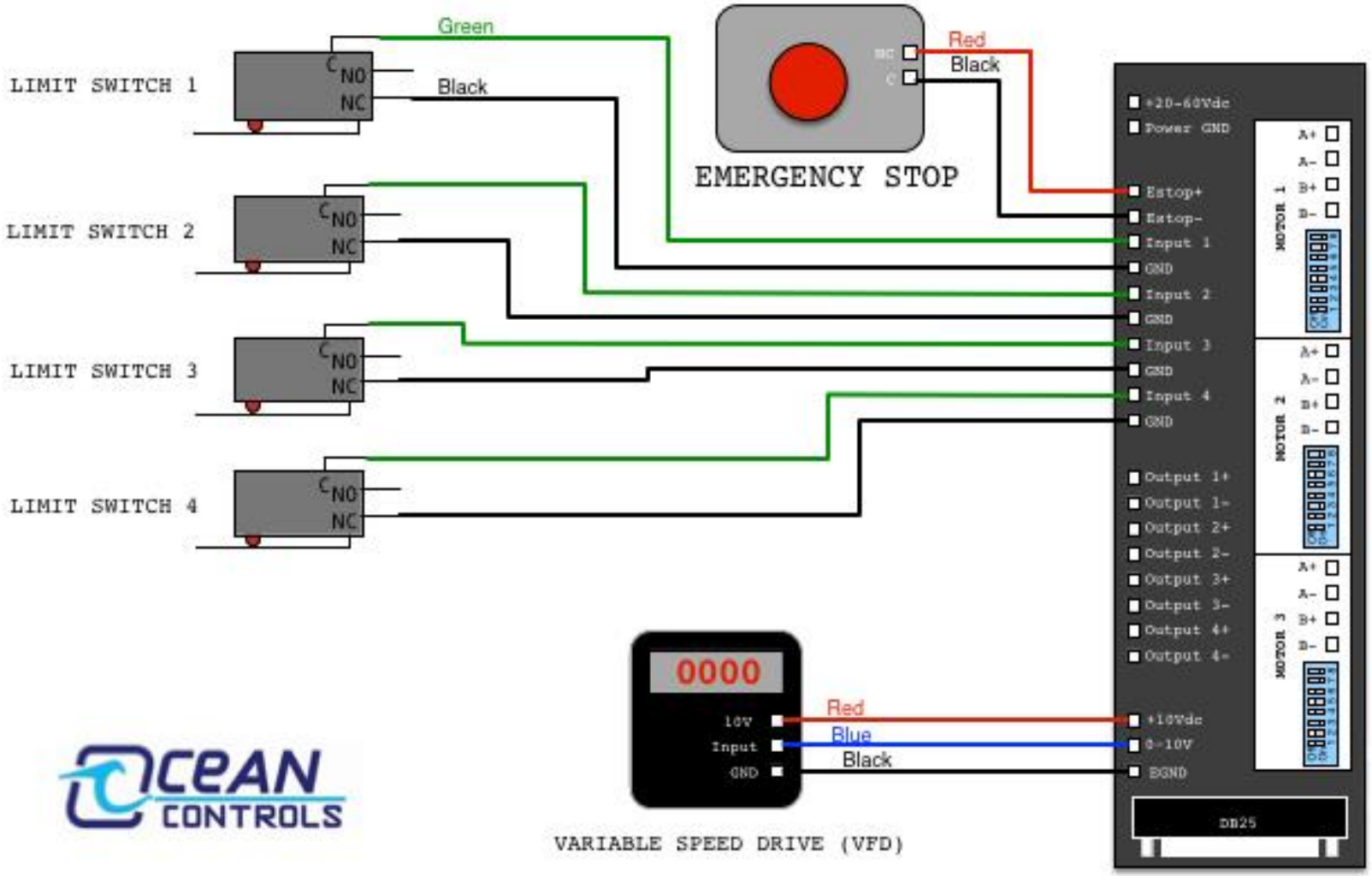

WARNING: LINE VOLTAGES ARE DANGEROUS

If you are not confident about working with mains voltages, get a licensed electrician to check your work before connecting power.

7. (SMC-040) MX3660 3-AXIS STEPPER DRIVER (EXTERNAL OPTIONS 2)

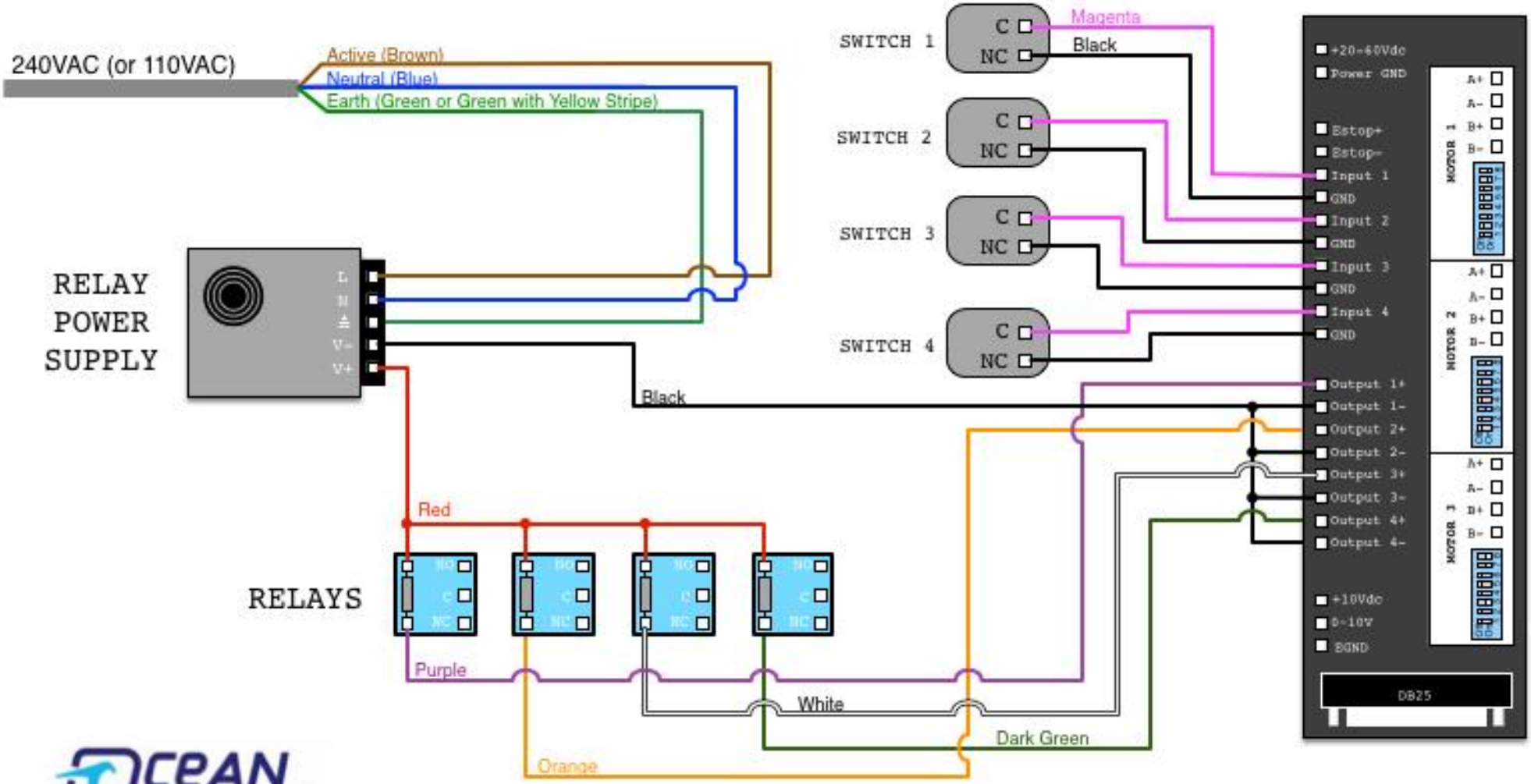

WARNING: LINE VOLTAGES ARE DANGEROUS

If you are not confident about working with mains voltages, get a licensed electrician to check your work before connecting power.

8. WIRING ADDITIONAL 4th AXIS WIRING (USING INDEPENDENT DRIVER SUPPLY)

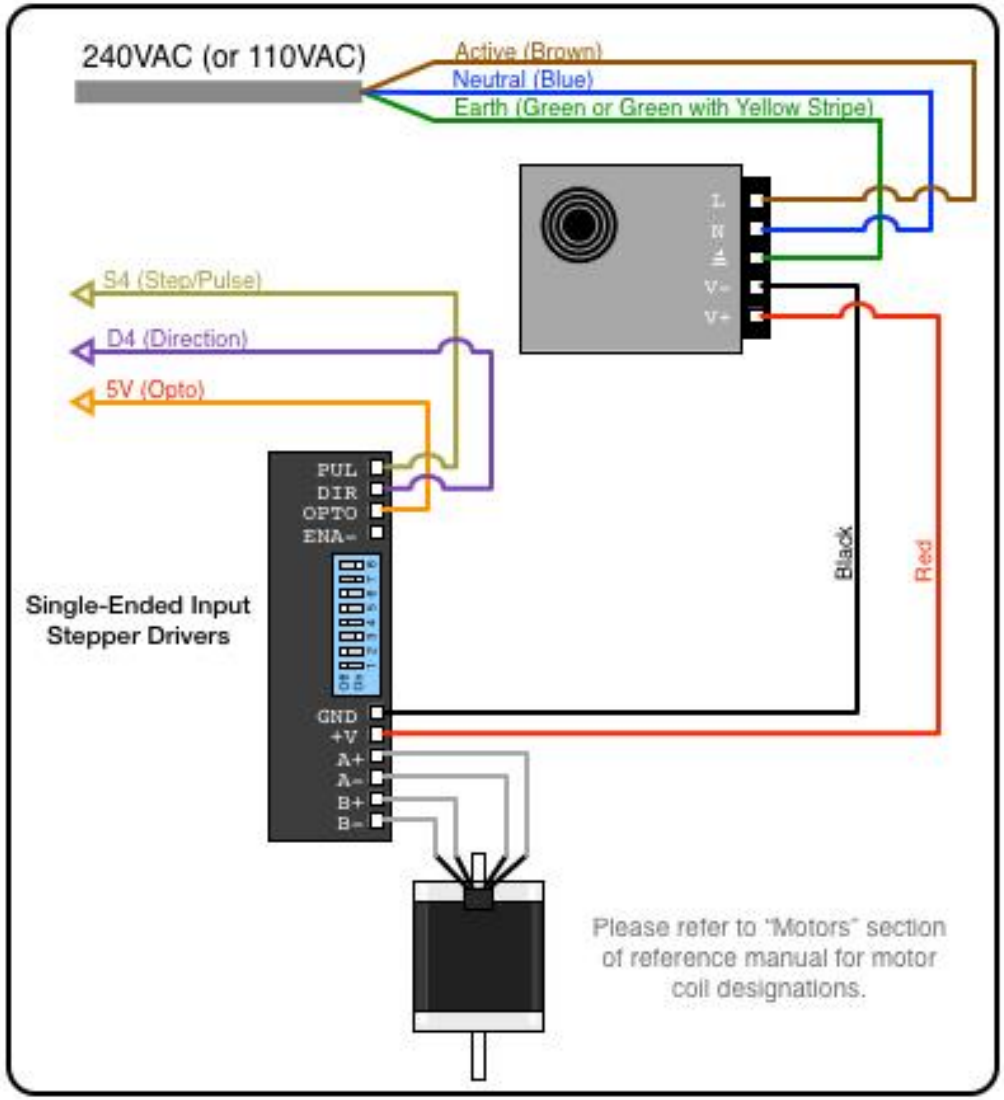

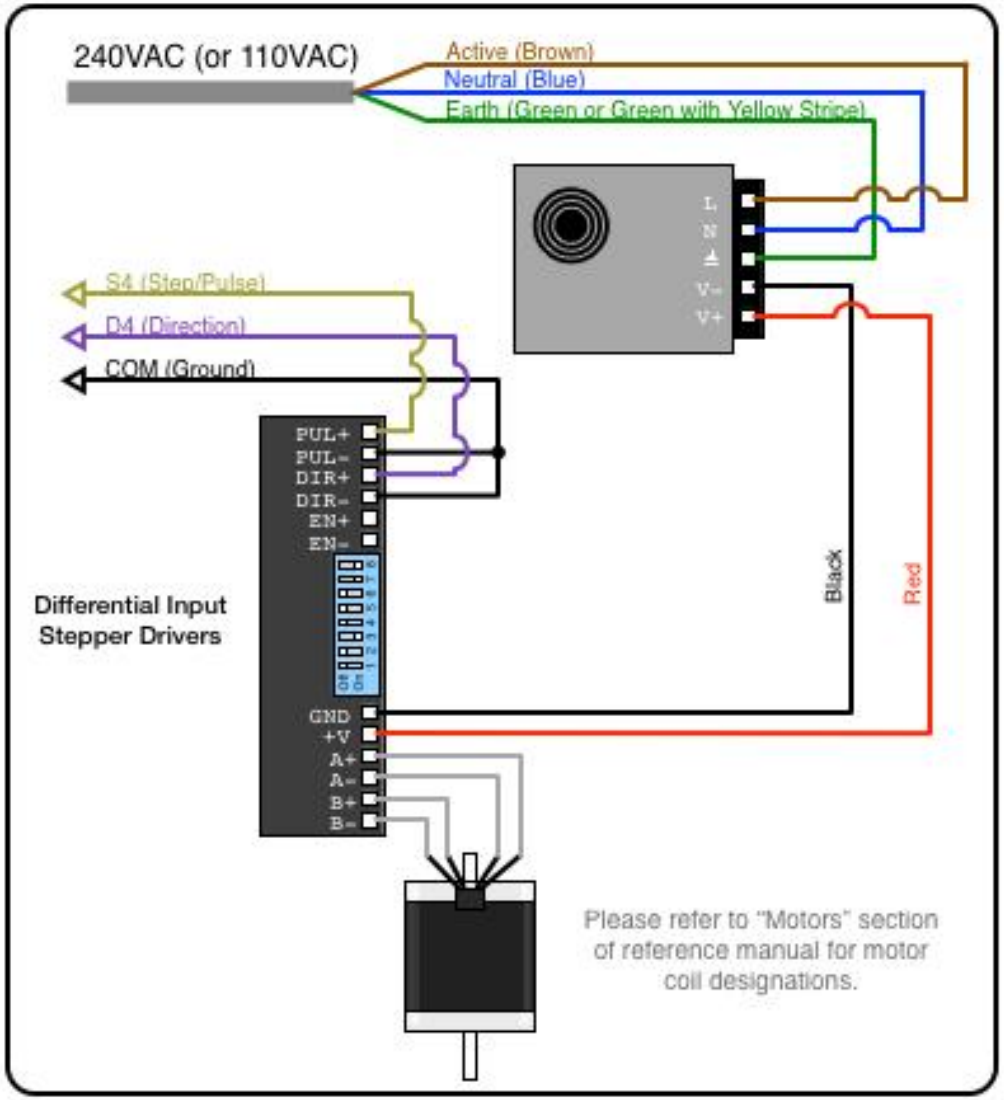

WARNING: LINE VOLTAGES ARE DANGEROUS

If you are not confident about working with mains voltages, get a licensed electrician to check your work before connecting power.

9. WIRING ADDITIONAL 4th AXIS (USING EXISTING STEPPER DRIVER SUPPLY)

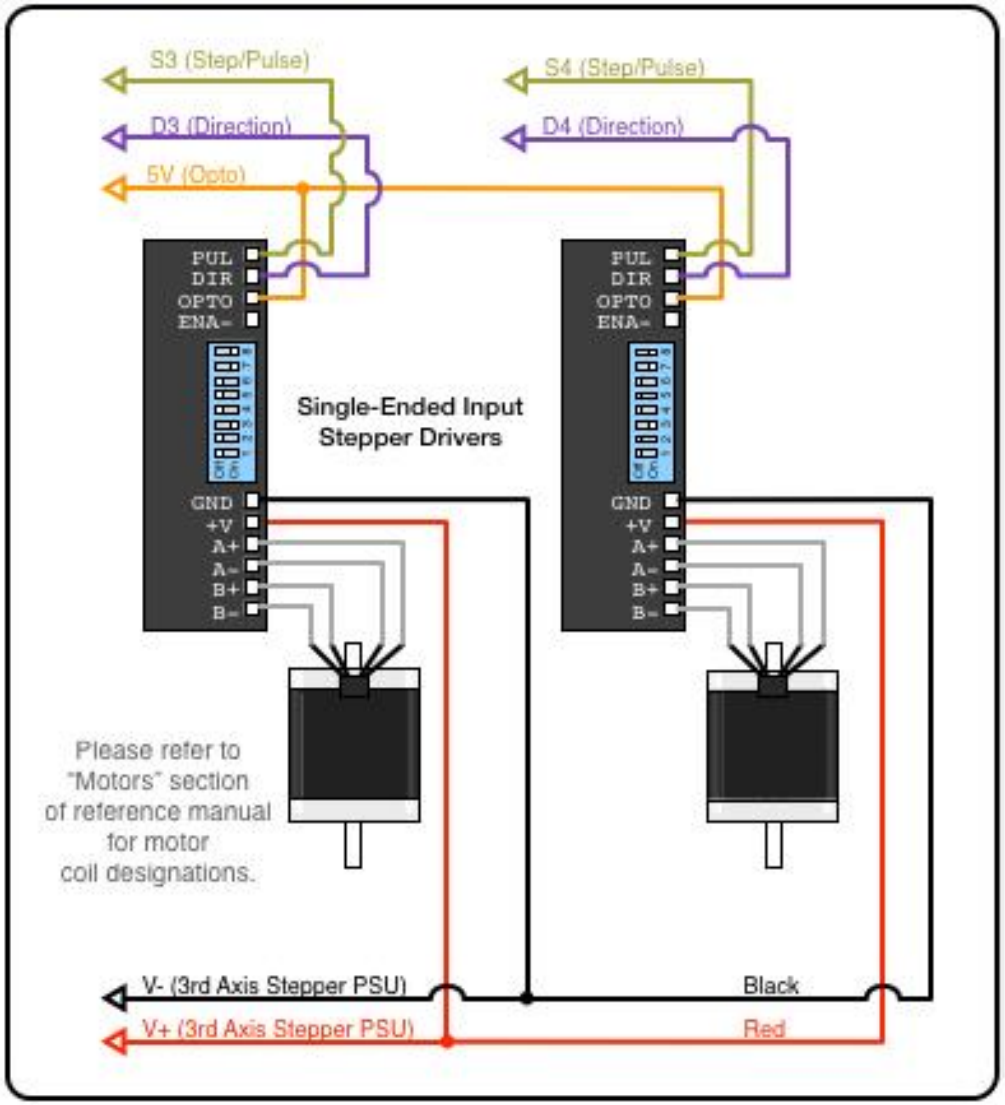

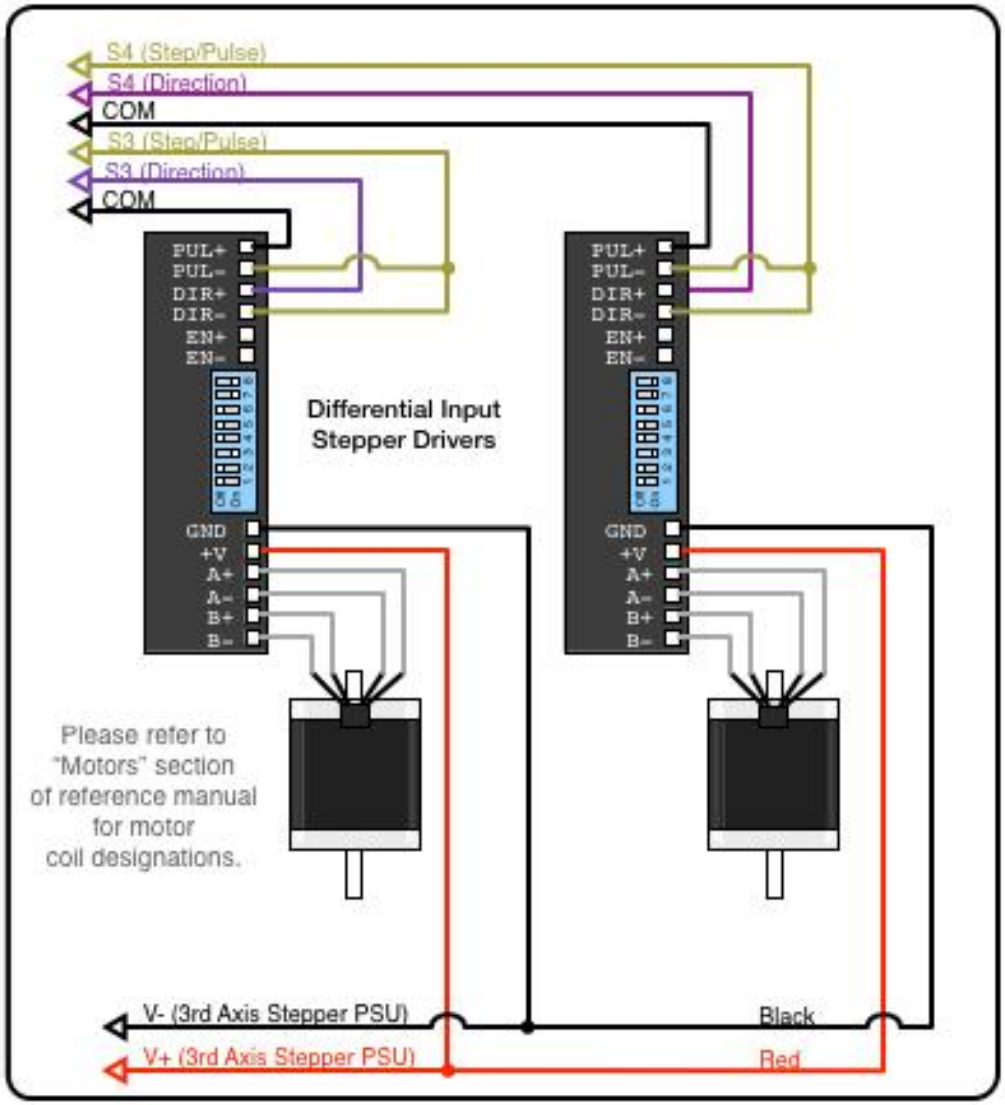

WARNING: LINE VOLTAGES ARE DANGEROUS

If you are not confident about working with mains voltages, get a licensed electrician to check your work before connecting power.

10. LIMIT SWITCH CONNECTION DIAGRAM

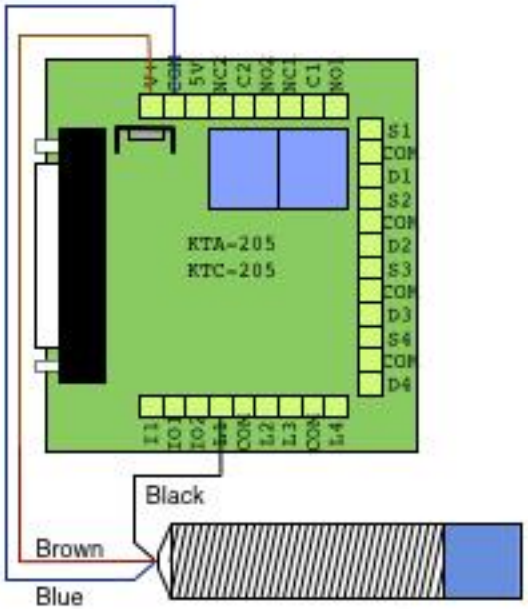

Wiring an NPN-type Limit Switch

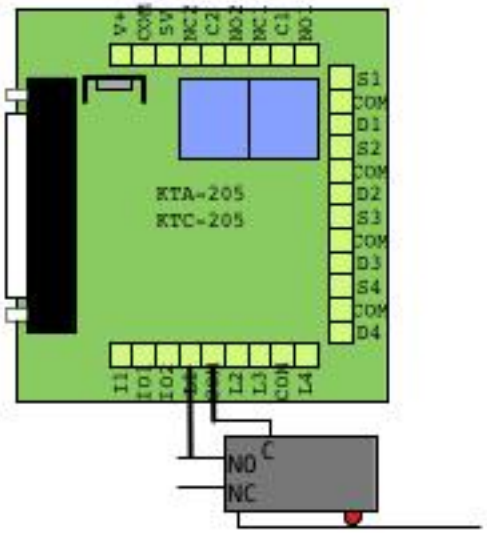

Wiring a microswitch as a Limit Switch

WARNING: LINE VOLTAGES ARE DANGEROUS

If you are not confident about working with mains voltages, get a licensed electrician to check your work before connecting power.

11. DUAL MOTOR - SINGLE AXIS CONNECTION DIAGRAM

Wiring two motors to a single axis
(recommended for axes longer than 1.5m)

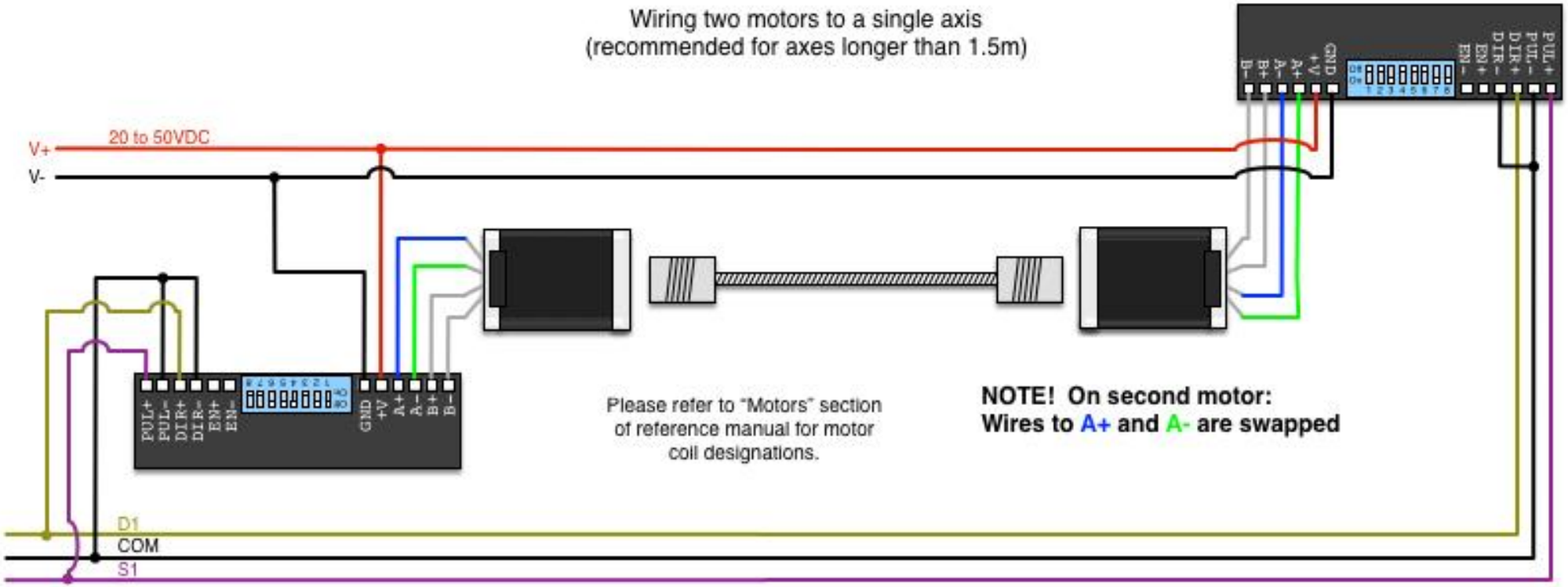

Please refer to "Motors" section of reference manual for motor coil designations.

NOTE! On second motor:
Wires to A+ and A- are swapped

WARNING: LINE VOLTAGES ARE DANGEROUS

If you are not confident about working with mains voltages, get a licensed electrician to check your work before connecting power.

CONTACT US

Visit: 14 Miles Grove, Seaford, VIC 3198, Australia

(Near the corner of Miles Grove and Wise Ave)

Business Hours: 9 AM to 5 PM, Monday to Friday (except public holidays)

Phone: +61 3 9782 5882

Fax: +61 3 9782 5517