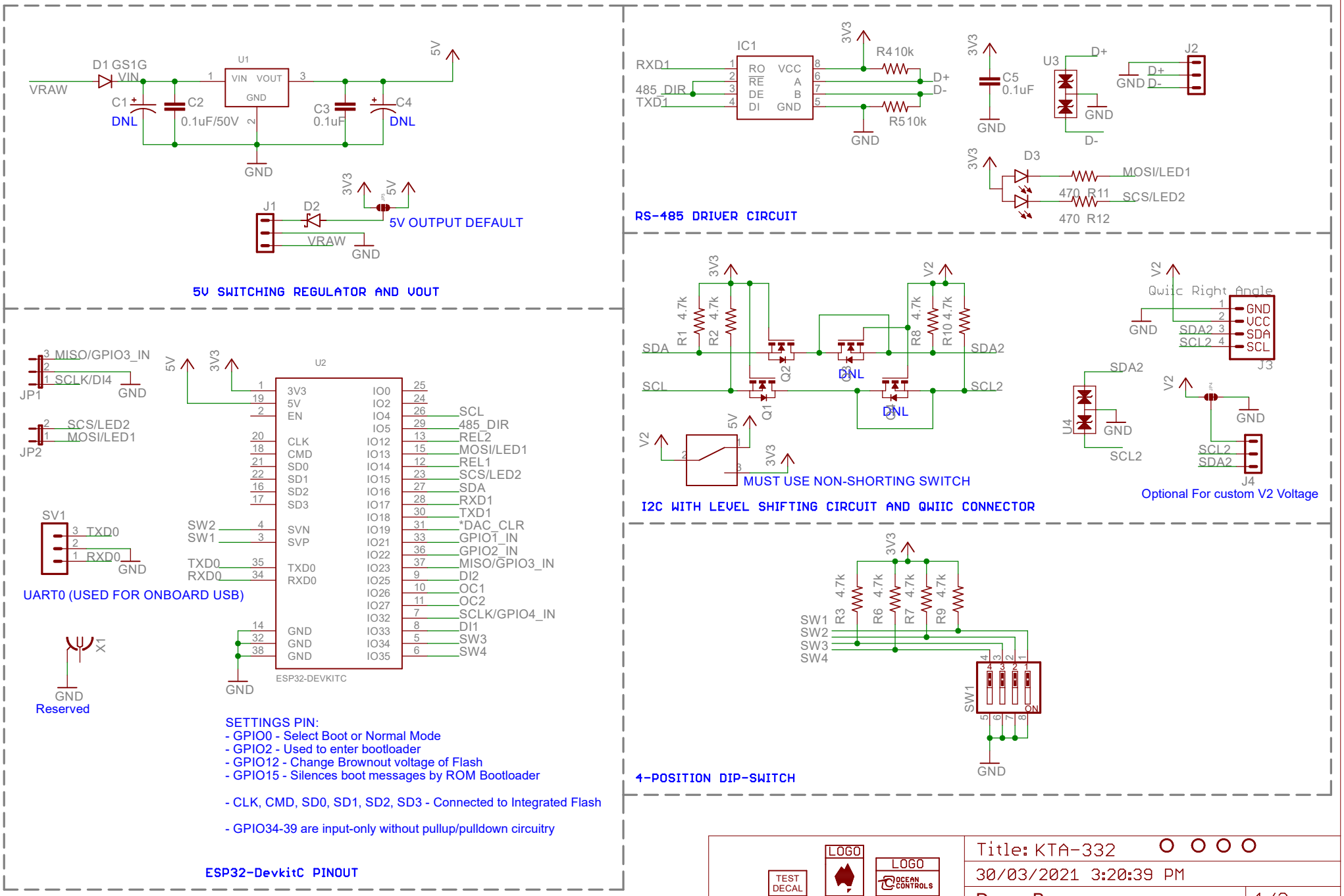
5V SWITCHING REGULATOR AND VOUT
D1 GS1G
VRAW
VIN
U1
VIN VOUT
GND
C1
DNL
C2
0.1uF/50V
C3
0.1uF
C4
DNL
5V
GND
J1
D2
3V3
5V
JP3
5V OUTPUT DEFAULT
VRAW
GND
RS-485 DRIVER CIRCUIT
IC1
RO VCC
RE A
DE B
DI GND
RXD1
485_DIR
TXD1
R4 10k
R5 10k
D+
D-
GND
3V3
C5
0.1uF
U3
D+
D-
GND
J2
D3
MOSI/LED1
470 R11
SCS/LED2
470 R12
I2C WITH LEVEL SHIFTING CIRCUIT AND QWIIC CONNECTOR
SDA
SCL
R1 4.7k
R2 4.7k
Q1
Q2
Q3
Q4
DNL
R8 4.7k
R10 4.7k
SDA2
SCL2
V2
MUST USE NON-SHORTING SWITCH
Qwiic Right Angle
GND
VCC
SDA
SCL
J3
U4
J4
Optional For custom V2 Voltage
4-POSITION DIP-SWITCH
SW1
SW2
SW3
SW4
R3 4.7k
R6 4.7k
R7 4.7k
R9 4.7k
ON
ESP32-DEVKITC
U2
3V3
5V
EN
CLK
CMD
SD0
SD1
SD2
SD3
SVN
SVP
TXD0
RXD0
GND
IO0
IO2
IO4
IO5
IO12
IO13
IO14
IO15
IO16
IO17
IO18
IO19
IO21
IO22
IO23
IO25
IO26
IO27
IO32
IO33
IO34
IO35
SCL
485_DIR
REL2
MOSI/LED1
REL1
SCS/LED2
SDA
RXD1
TXD1
*DAC_CLR
GPIO1_IN
GPIO2_IN
MISO/GPIO3_IN
DI2
OC1
OC2
SCLK/GPIO4_IN
DI1
SW3
SW4
JP1
MISO/GPIO3_IN
SCLK/DI4
JP2
SCS/LED2
MOSI/LED1
SV1
TXD0
RXD0
UART0 (USED FOR ONBOARD USB)
X1
Reserved
SETTINGS PIN:
- GPIO0 - Select Boot or Normal Mode
- GPIO2 - Used to enter bootloader
- GPIO12 - Change Brownout voltage of Flash
- GPIO15 - Silences boot messages by ROM Bootloader
- CLK, CMD, SD0, SD1, SD2, SD3 - Connected to Integrated Flash
- GPIO34-39 are input-only without pullup/pulldown circuitry
ESP32-DevkitC PINOUT
TEST DECAL
LOGO
LOGO
OCEAN CONTROLS
Title: KTA-332
30/03/2021 3:20:39 PM
Drawn By:
1/3

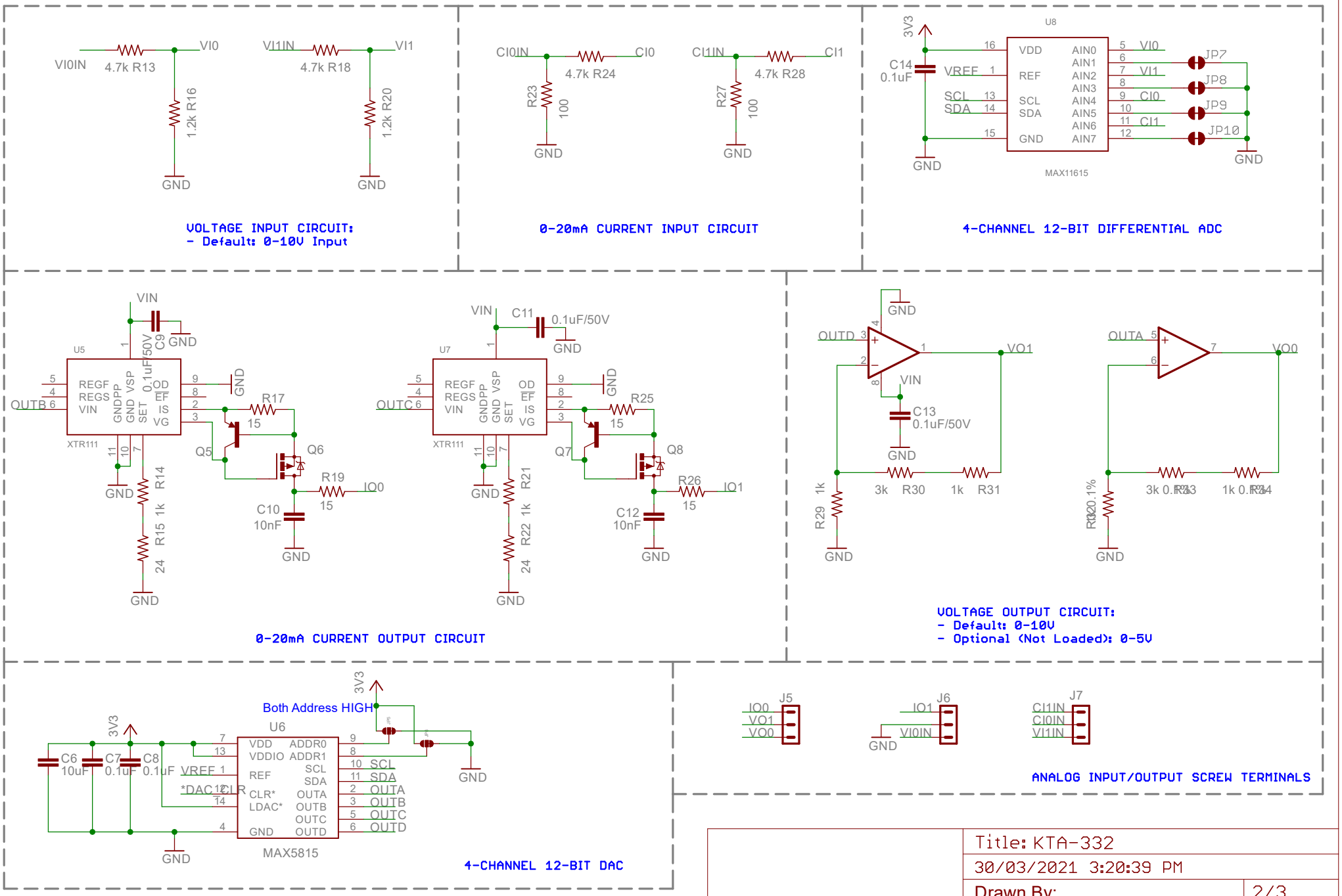

Title: KTA-332	
30/03/2021 3:20:39 PM	
Drawn By:	2/3

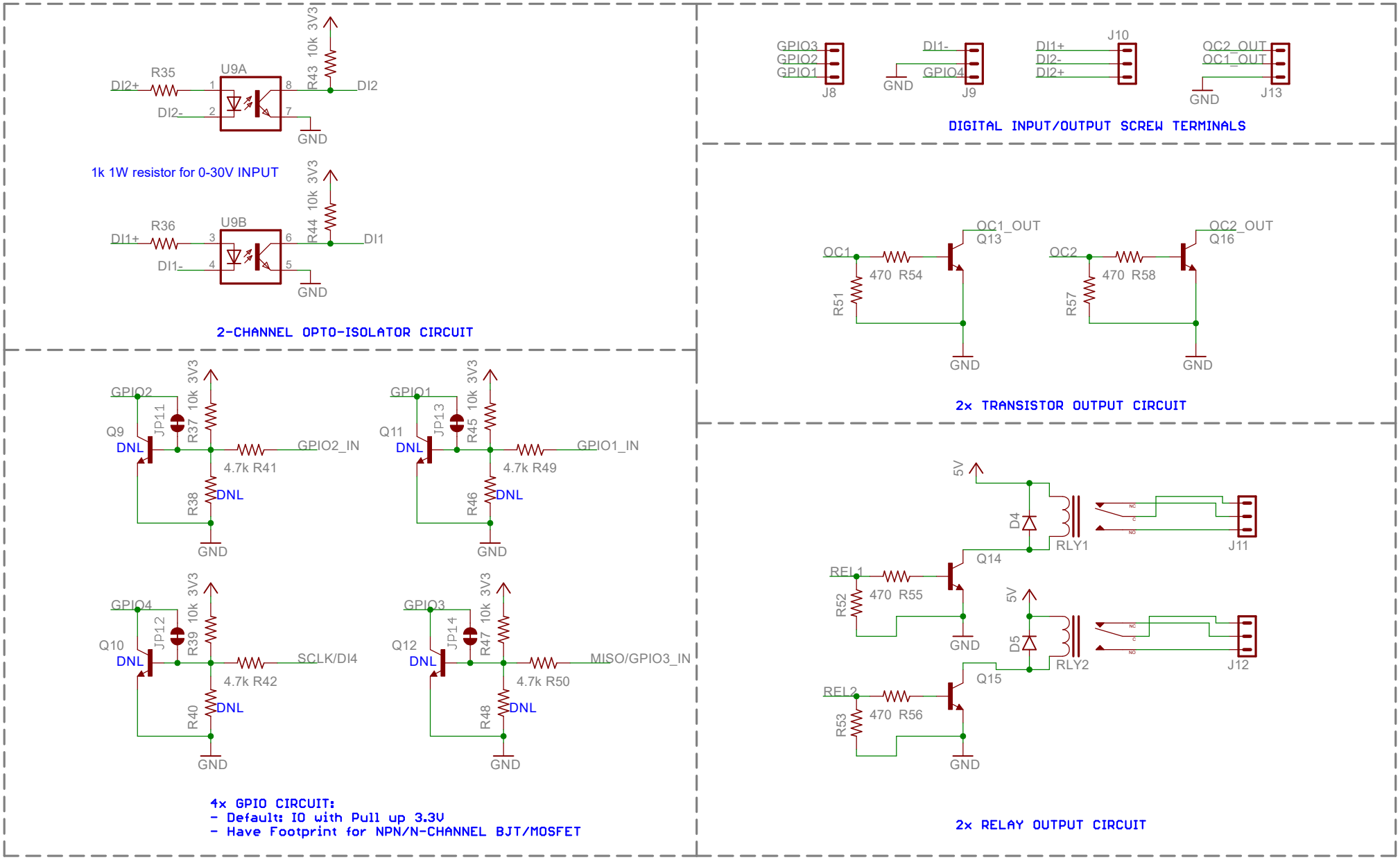

Title: KTA-332	
30/03/2021 3:20:39 PM	
Drawn By:	3/3