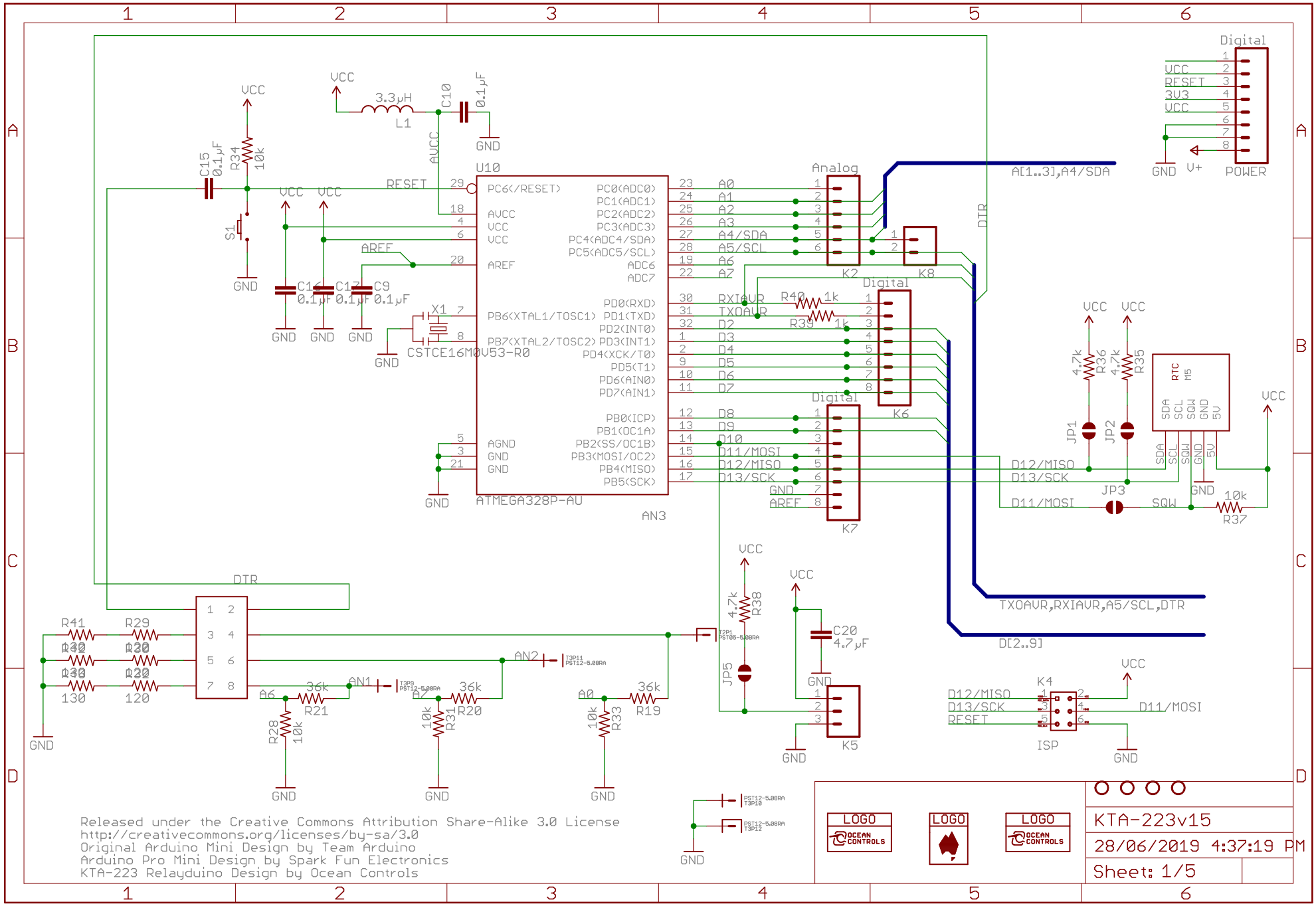

Released under the Creative Commons Attribution Share-Alike 3.0 License
http://creativecommons.org/licenses/by-sa/3.0
Original Arduino Mini Design by Team Arduino
Arduino Pro Mini Design by Spark Fun Electronics
KTA-223 Relayduino Design by Ocean Controls

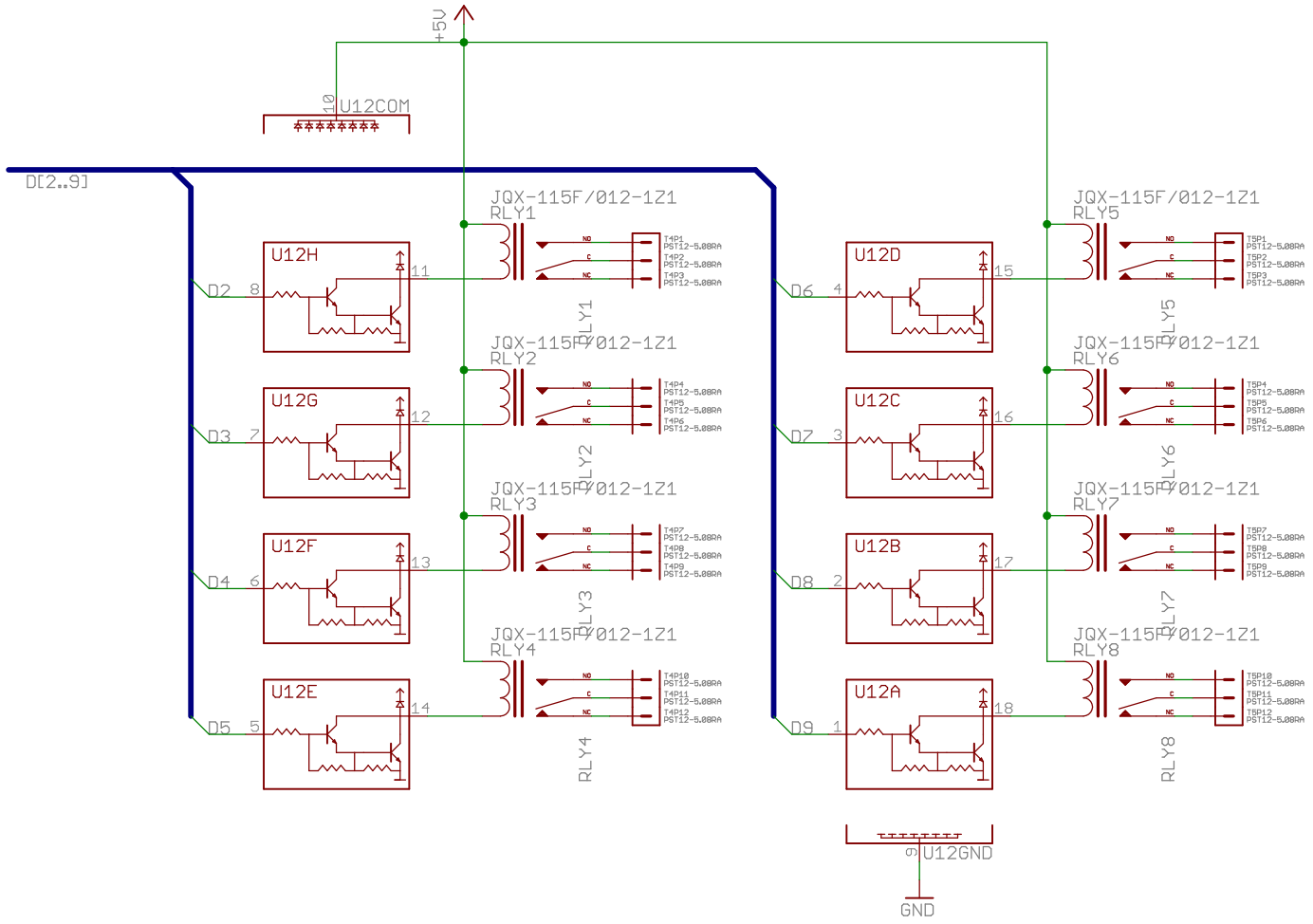

KTA-223v15	
28/06/2019 4:37:19 PM	
Sheet: 2/5	

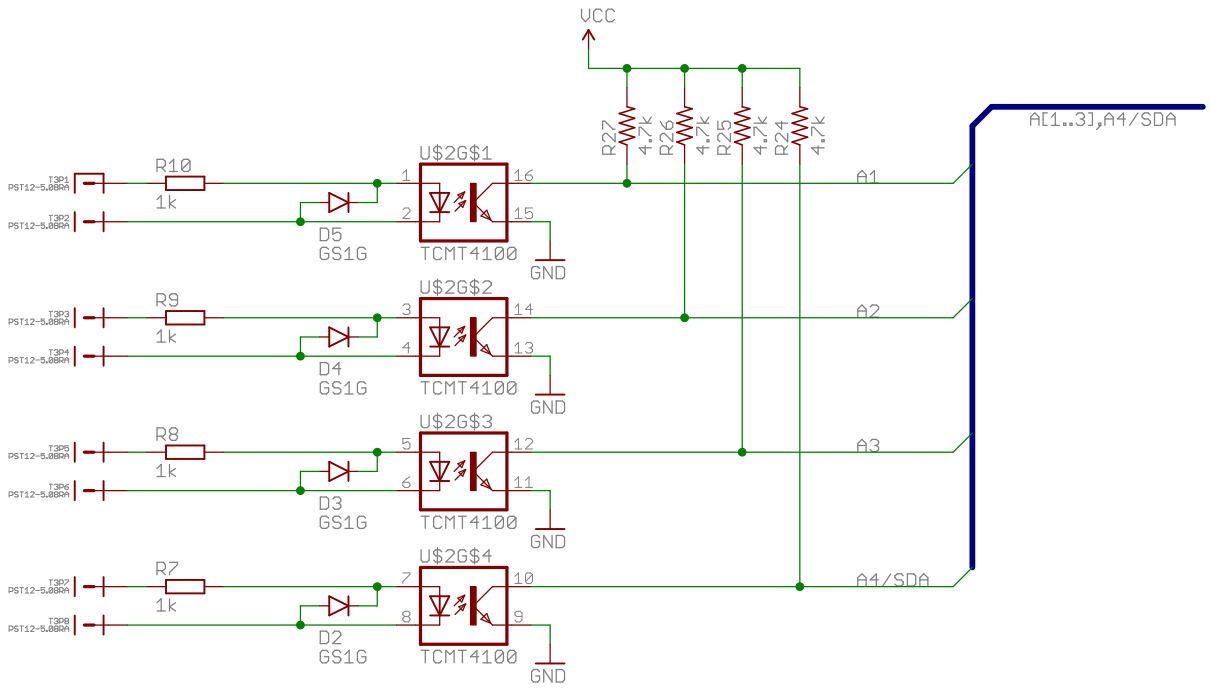

KTA-223v15

28/06/2019 4:37:19 PM

Sheet: 3/5

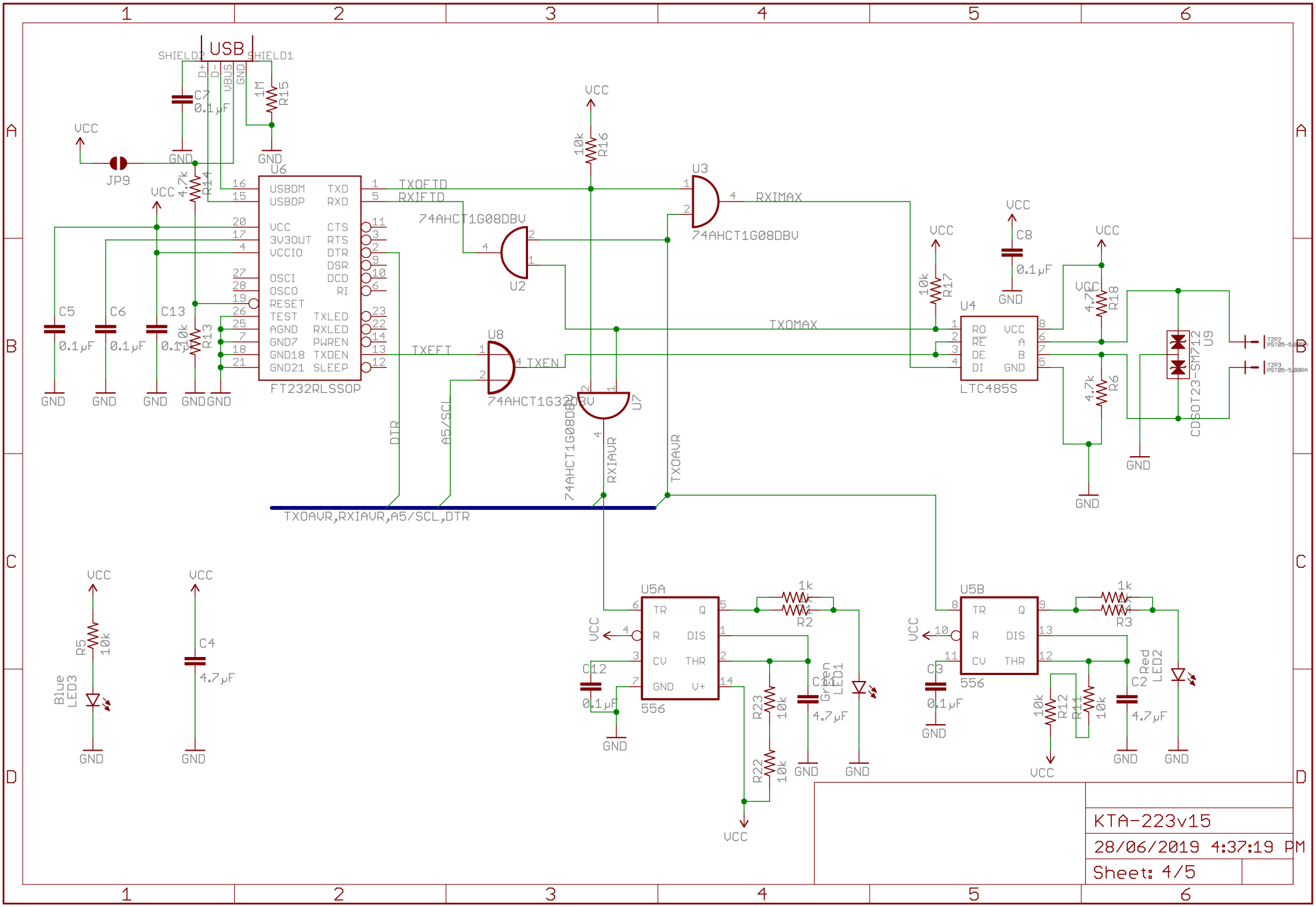
USB
SHIELD2
SHIELD1
D+
D-
VBUS
GND
C7
0.1µF
1M
R15
VCC
JP9
GND
4.7k
R14
U6
USBDM
USBDP
VCC
3V3OUT
VCCIO
OSCI
OSCO
RESET
TEST
AGND
GND7
GND18
GND21
TXD
RXD
CTS
RTS
DTR
DSR
DCD
RI
TXLED
RXLED
PWREN
TXDEN
SLEEP
FT232RLSSOP
TXOFTD
RXIFTD
TXEFT
TXEN
C5
0.1µF
C6
0.1µF
C13
0.1µF
10k
R13
10k
R16
U3
74AHCT1G08DBV
RXIMAX
U2
U8
74AHCT1G32DBV
U7
74AHCT1G08DBV
TXOMAX
DTR
A5/SCL
RXIAVR
TXOAVR
TXOAVR,RXIAVR,A5/SCL,DTR
10k
R17
U4
RO
RE
DE
DI
VCC
A
B
GND
LTC485S
C8
0.1µF
4.7k
R18
4.7k
R6
U9
CDSOT23-SM712
T2P2
PST05-5.08RA
T2P3
PST05-5.08RA
U5A
TR
R
CV
GND
Q
DIS
THR
V+
556
1k
R1
R2
C12
0.1µF
R23
10k
R22
10k
C1
Green
LED1
4.7µF
U5B
556
1k
R4
R3
C3
0.1µF
R12
10k
R11
10k
C2
4.7µF
Red
LED2
R5
10k
Blue
LED3
C4
4.7µF
KTA-223v15
28/06/2019 4:37:19 PM
Sheet: 4/5

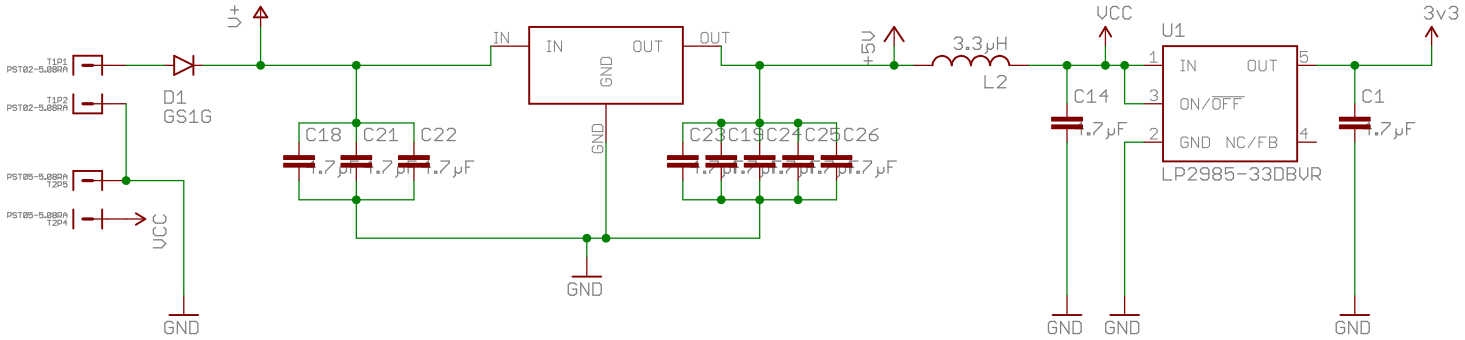

KTA-223v15	
28/06/2019 4:37:19 PM	
Sheet: 5/5	