SPECIFICATIONS

Model：MCA426M

Description：MODBUS output inclinometer

Production implementation standard reference

● Enterprise quality system standards: ISO9001: 2008 standard (certification number: 128101)

● Tilt sensor production standards: GB / T 191 SJ 20873-2003 inclinometer general specification of Level

● The Academy of metrology and quality inspection Calibrated in accordance to: JJF1119-2004 Electronic Level calibration Specification

● Gyro accelerometer test standard: QJ 2318-92 Gyro accelerometer test methods

● Software development reference standard: GJB 2786A-2009 military software development General requirements

● Product environmental testing standards: GJB150

● Electromagnetic anti-interference test standards: GB / T 17626

● Version：Ver.09

● Date:2015.8.3

Introduction

MCA426M is a MODBUS output inclinometer designed especially for industrial position control. It adopts RS485 hardware differential bus transmit data. It built-in high accuracy 12 bit A/D differential conventor, using third order filter algorithm to measure the pitch and roll angle relate to horizontal level. It could redress the temperature drift according to the inside temperature change because of the built-in ADI company's high accuracy digital temperature sensor, ensuring the high repeatability when it is under high and low temperature. The output respond frequency could reach 20Hz, high frequency could be customized. It is industrial level product with reliable performance, good expandability, multiple output types are optional, and it could apply to kinds of harsh industrial working condition.

Main feature

- ●single/dual axis
- ●measuring range ±45°
- ●accuracy：±0.5°
- ●DC 9～36V input
- ●working temp-40～+85℃
- ●resolution: 0.1°
- ●IP66
- ●anti-shock>2000g
- ●direct lead interface
- ●size：L61×W35×H21mm
- ●output type: MODBUS

Parameter

Item	condition					
range		±10	±30	±60	±90	°
Axis		X/ Y	X/ Y	X/ Y	X/ Y	
Resolution		0.01	0.01	0.01	0.01	°
Absolute accuracy	@25˚C	0.02	0.05	0.08	0.1	°
Long term stability		0.05	0.05	0.05	0.05	
Zero temperature coefficient	-40～85°	±0.006	±0.006	±0.006	±0.006	°/℃
Sensitivitytemperature coefficient	-40～85°	≤100	≤100	≤100	≤100	ppm /℃
Powerup starting time		0.5	0.5	0.5	0.5	S
Response time		0.02	0.02	0.02	0.02	s

Output rate	5Hz、15Hz、35Hz、50Hz、100HZ setable
Output signal	MODBUS
EMC	According to EN61000 and GBT17626
MTBF	⩾50000 hour/time
Insulation resistance	⩾100 megohm
Anti-impact	100g@11ms、times/axis(half sinusoid)
Anti-vibration	10grms、10～1000Hz
Water proof level	IP67
Cable	Standard: 1m durable, wide temperature, oil-proof, shield cable 4*0.3mm^2
Weight	120g(exclude cable)

Electric parameter

Parameter	condition	min value	typical value	max value	unit
Supply voltage	standard	9	12、24	36	V
	customized		5		V
Working current	No load		40		mA
Working temp.		-40		+85	℃
Storage temp.		-40		+85	℃

Mechanical Parameter

connector： 1m cable（customized）
waterproof：IP66
shell material：Aluminum alloy
Installation: three M4 screws

Working Principle

Adopt the European import of core control unit, using the capacitive micro pendulum principle and the earth gravity principle, when the the inclination unit is tilted, the Earth's gravity on the corresponding pendulum will produce a component of gravity, corresponding to the electric capacity will change, , by enlarge the amount of electric capacity , filtering and after conversion then get the inclination.

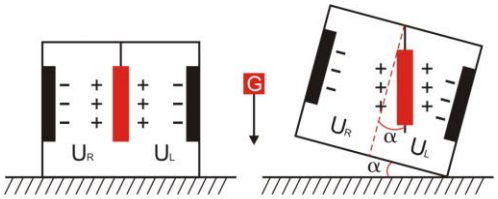

U_R, U_L Respectively is the pendulum left plate and the right plate corresponding to their respective voltage between theelectrodes, when the tilt sensor is tilted, U_R, U_L Will change according to certain rules, so $f(U_R, U_L,)$ On the inclination of α function:

$$\alpha = (U_R, U_L,)$$

Measuring Directions&Fix

The installation must guarantee the product bottom is parallel to measured face，and reduce the influence of dynamic and acceleration to the sensor. This product can be installed horizontally or mounted vertically (mounted vertically selection is only applicable to the single axis), for installation please refer to the following scheme.

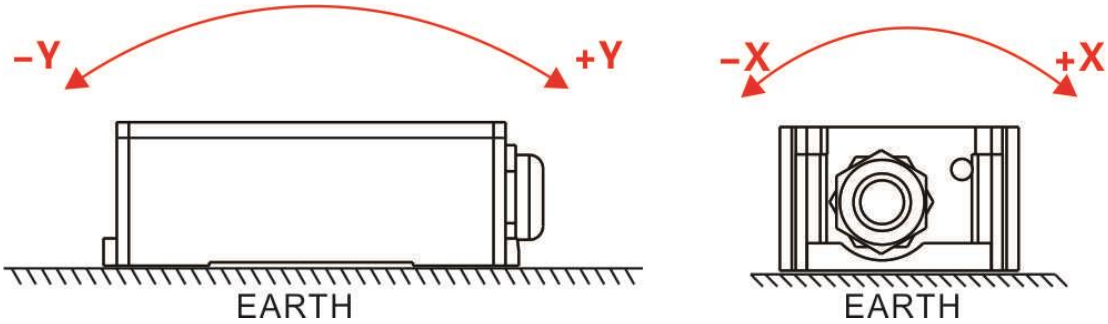

Dimension

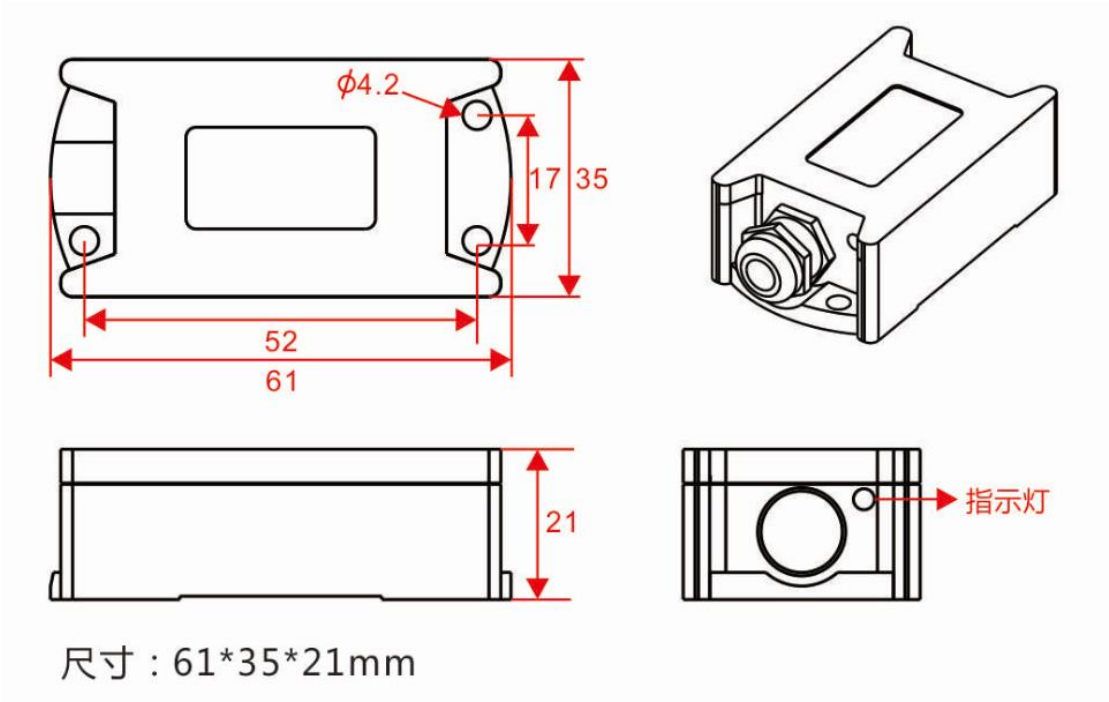

Electrical Connection

Line color function	BLACK	WHITE	GREEN	RED
	GND	RS485(D+)	RS485(D-)	Vcc 9～36V

Product MODBUS Protocol

1) MODBUS protocol stipulates that it should be over 3.5 byte time between two data frame(Eg. Under 9600 baud rate, the time is 3.5×（1/9600）×11=0.004s). This sensor increase the time to 10ms for a enough margin, so please set 10ms time interval at least between each data frame.
Host send command--10ms interval--slave response command--10ms time interval--host send command...
2)MODBUS protocol stipulates broadcast address---content relate to 0. This sensor also capable of receiving broadcast address content but without response. So broadcast address 0 could be used as(below is reference only):
1. Set all the addresses of inclinometers mounted on BUS with this Model NO as one address.
2. Set all the inclinometers mounted on BUS with this Model NO to be relative/absolute zero.
3.Test all inclinometers mounted on BUS. Host inquires angle command by sending

3. 0 address to BUS, if the communication light flashes, then communication is in proper function.
3) for sake of system reliability, when set address and relative/absolutive command, it should be send two times continuously, which means two successful sending with continuous responses by slave, that is no data frame between the two inquiries, or the command will be locked till power off. Set as below:
Send set address command--stand by for slave response set success command--send again set address command(no other command between)--stand by for slave response set success command--successful revision
After power-up, two set commands mentioned above could be only set once, if need reset, please set after power on again.

5) the communication light will flash once when proper communications accumulate to a ceratin times.

1.Data frames format：

RTU Mode

Communication Parameter：Baud rate 9600 bps

Data frames：1 Start bit，8 datas，even parity check，1 stop bit

2. Read angle data：

Modbus FUNC 03H

Host Computer Inquiry Command ：		Slave Computer Response ：		
Inclinometer Address	01H	Inclinometer Address	01H	
FUNC	03H	FUNC	03H	
Visit Register first Address	00H	Data Length 8 bytes	08H	
	02H	Data word 1 upper 8 bits	50H	X Axis Data
Data Length 4 bytes	00H	Data word 1 Lower 8 bits	46H	
	04H	Data word 2 upper 8 bits	00H	
CRC	E5C9H	Data word 2 lower 8 bits	00H	
		Data word 3 upper 8 bits	23H	Y Axis Data
		Data word 3 lower 8 bits	20H	
		Data word 4 upper 8 bits	00H	
		Data word 4 lower 8 bits	00H	
		CRC	BD61H	

Read measured data command example 1：												
Host send					01 H	03 H	00 H	02 H	00 H	04 H	E5H	C9H
Slave response												
01H	03 H	08 H	50 H	46 H	00 H	00 H	23H	20 H	00H	00 H	BD H	61H

Note: the data filed of slave computer response frame is 50H，46H，00H，00H，23H，20H，00H，00H

X axis is the 1~4 byte of data filed, Y axis is the 5~8 byte of data filed, Low byte at front. Angle express way is point and number, one point corresponds to 0.01°, 0.01 x (point-offset), then it is angle, take measuring range of 90 degree as an example, then the total points is 18000 point, so 0 corresponds to -90°, 18000 corresponds to +90°, 9000 corresponds to 0°.

As above explained, the angle convert as below:

1) get current angle point number, note, low byte at front, X axis is 4650H, Y axis is 2023H.

2) convert to decimal system, X axis: 4650H→180000, Y axis: 2023H→8227.

3) deduct offset 9000(note: the value relate to measure range), X axis: 180000-9000=9000，Y axis：8227-9000＝-773.

4) get final angle, X axis: 9000×0.01=90.00º, Y axis: -773×0.01=-7.73º.

Read measured data command example 2：								
Host send	01 H	03 H	00 H	02 H	00 H	04 H	E5H	C9H
Slave response								
01H	03 H	08 H	00H	00 H	00 H	00 H	00H	23 H	00H	00 H	64 H	1DH

Assume the measuring range is +-45º, then total points number is 9000 points. So 0 correspondsto -45º, 9000 corresponds to +45º, 4500 corresponds to 0º, angle convert as below:

1）get current angle points number, note, low byte at front, X is 0000H，Y is 2300H.

2）convert to decimal system, X: 0000H→0, Y：2300H→8960。

3）deduct offset value 4500（note: the value relate to measure range），X：0-4500=-4500，Y:8960-4500＝4460。

4）get final angle, X：-4500×0.01=-45.00º，Y：4460×0.01=44.60º。

3. **Setting inclinometer relative/absolute ZERO:**

Modbus FUNC 06H

Setting relative/absolute ZERO command：		Slave computer response ：	
Inclinometer Address	01H	Inclinometer Address	01H
FUNC	06H	FUNC	06H
Visit Register first Address	00H	Register Address	00H
	10H		10H
Word nonzero is relative ZERO, word ZERO is absolute ZERO	00 H	Word nonzero is relative ZERO, word ZERO is absolute ZERO	00H
	FFH / 00H Relative / Absolute		FFH / 00H Relative/ Absolute
CRC	C84FH/ 880FH	CRC	C84FH/ 880FH

Setting ZERO command application example：								
Host computer sending	01 H	06 H	00 H	10 H	00 H	FFH	C8H	4FH
Slave computer response								
01 H	06 H	00 H	10 H	00 H	FFH	C8 H	4FH

Note：0010 is register address，the register control inclinometer output is relative ZERO or absolute ZERO。If nonzero（As example as above，was written in 00FFH），the output is relative ZERO。On contrary if zero（will change the fiveth and sixth bytes to 00H），then is absolute ZERO,. the last two bytes is CRC checksum .

4. **Setting inclinometer address:**

Setting inclinometer addresss code command：	**Slave computer response**

Inclinometer Address	01H	Inclinometer Address	01H
FUNC	06H	FUNC	06H
Address	00H	Register Address	00H
	11H		11H
Inclinometer new address 04H	00 H	Inclinometer new address	00H
	04H		04H
CRC	D80C	CRC	D80C

Note: The slave computer response the command then the address is changed to new address as above 04H .

Setting inclinometer address command application example ：								
Host computer sending		01 H	06 H	00 H	11 H	00 H	04H	D8H	0CH
Slave computer response								
01 H	06 H	00 H	11 H	00 H	04H	D8 H	0CH	

Note：0011H is register address，the register control inclinometer address.Above example，the inclinometer address is changed to 0004H, the last two bytes is CRC checksum.

深圳市瑞芬科技有限公司
CHINA SHENZHEN RION TECHNOLOGY CO.,LTD.